SUN SPECIAL INDUSTRIAL SEWING MACHINE

PARTS BOOK

MODEL: SST-C007D

MODEL: SST-C007D/P1

索引	INDEX	PAGE
1. 外觀零件(1)	MISCELLANEOUS COVERS(1)	2-3
2. 外觀零件(2)	MISCELLANEOUS COVERS(2)	4-5
3. 綫道機構	MISCELLANEOUS THREAD EYELETS	6-7
4. 套管零件	MISCELLANEOUS BUSHINGS	8-9
5. 主軸傳動機構	MAIN SHAFT DRIVING MECHANISM	10-11
6. 收綫機構	THREAD TAKE-UP MECHANISM	12-13
7. 上軸機構	UPPER SHAFT MECHANISM	14-15
8. 針綫收綫機構	NEEDLE THREAD TAKE-UP MECHANISM	16-17
9. 針棒機構	NEEDLE BAR MECHANISM	18-19
10.壓脚機構	PRESSER FOOT MECHANISM	20-21
11.裝飾綫機構	SPREADER MECHANISM	22-23
12.勾針驅動機構(1)	LOOPER DRIVING MECHANISM(1)	24-25
13.勾針驅動機構(2)	LOOPER DRIVING MECHANISM(2)	26-27
14.送料控制機構	FEED DRIVING CONTROL MECHANISM	28-29
15.針擋與送料機構	NEEDLE GUARD & FEED DRIVING MECHANISM	30-31
16.潤滑系統(1)	LUBRICATING SYSTEM(1)	32-33
17.潤滑系統(2)	LUBRICATING SYSTEM(2)	34-35
18.附件	ACCESSORIES	36-39
零件號碼與頁數對照表	NUMERICAL PARTS-LIST	40-43

1. SST-C007D 外觀零件(1) MISCELLANEOUS COVERS(1)

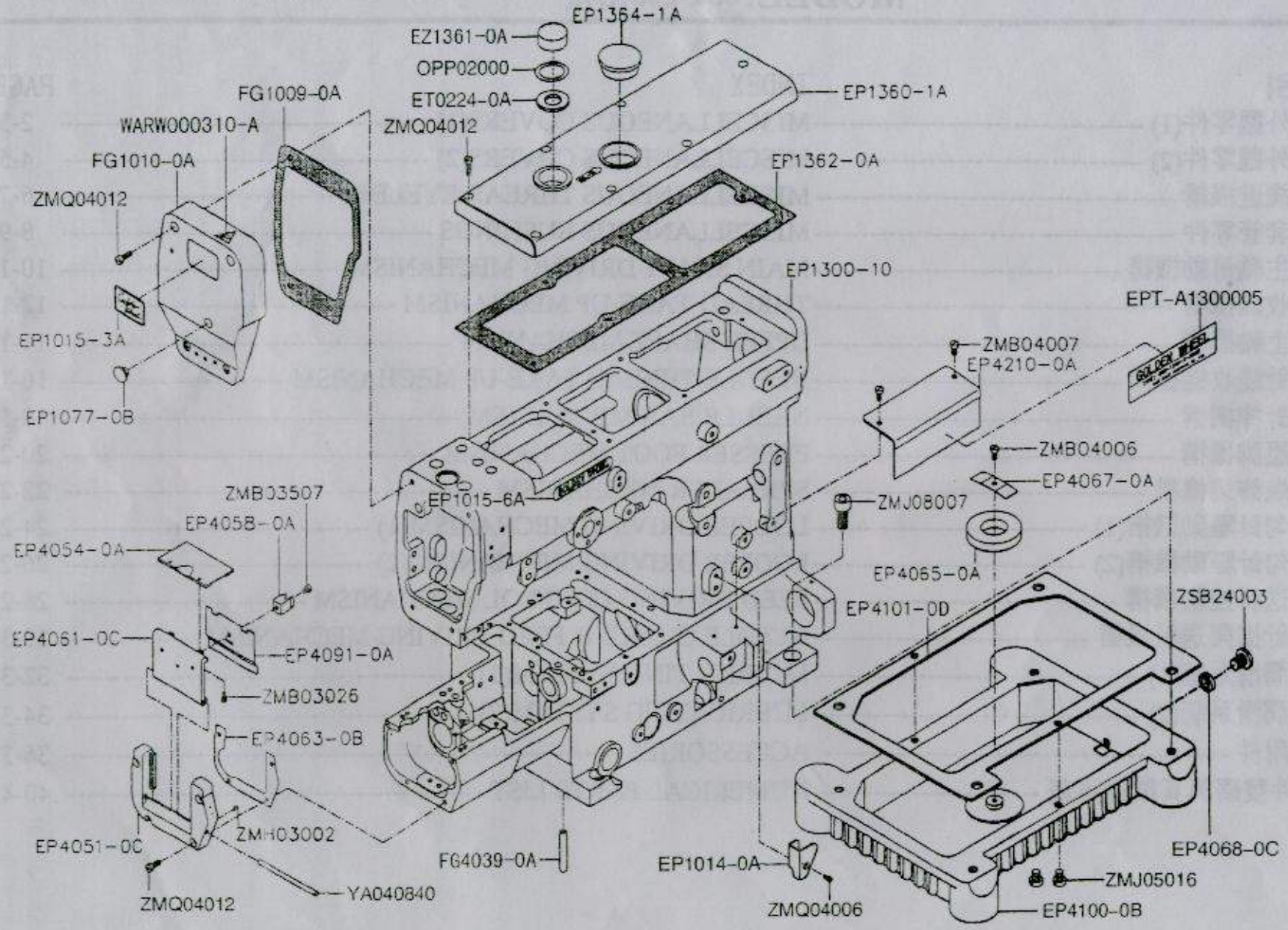

1. SST-C007D 外觀零件(1) MISCELLANOUS COVERS(1)

零件號碼 Parts No.	零件名稱	Name of Parts	件數 QTY
EPT-A1300005	銘板	Brand Name Plate	1
ET0224-0A	墊片	Side Cover Gasket	1
FG1009-0A	面板墊片	Head Cover Gasket	1
FG1010-0A	面板	Head Cover	1
EP1015-3A	銘板	Brand Name Plate	1
EP1015-6A	銘板	Brand Name Plate	1
EP1016-1A	機型銘板	Model Plate	1
EP1014-0A	綫道蓋	Cover	1
EP1077-0B	塞子	Head Cover Seal Plug	1
EP1300-10	本體	Machine Frame Unit	1
EP1360-1A	頂蓋	Top cover	1
EP1362-0A	頂蓋墊片	Top cover Gasket	1
EP1364-1A	塞子	Top Cover Seal Plug	1
FG4039-0A	支持棒	Machine Frame Supporting Bar	4
EP4051-0C	鉸鏈固定板	Side Cover Hinge	1
EP4054-0A	布板	Cloth Plate	1
EP4058-0A	彈簧片	Cover Latch Spring	1
EP4061-0C	鉸鏈活動板	Side Cover	1
EP4063-0B	墊片	Washer	1
EP4065-0A	磁鐵	Magnet	1
EP4067-0A	固定片	Magnet Holder	1
EP4068-0C	油環	Oil Reservoir Gasket	1
EP4091-0A	彈簧片	Cover Latch Spring	1
EP4100-0B	下油槽	Oil Reservoir	1
EP4101-0D	墊片	Washer	1
EP4210-0A	壓板蓋	Push Plate Cover	1
EZ1361-0A	油鏡	Oil Sight Window	1
OPP02000	O 形环	Ring	1
WARW000310-A	標貼	Paster	1
YA040840	平行銷	Side Cover Hinge Pin	1
ZMB03026	螺絲	Screw	2

零件號碼 Parts No.	零件名稱	Name of Parts	件數 QTY	備注 Remarks
ZMB04006	螺絲	Screw (M4-0.7×4.5)	1	
ZMB04007	螺絲	Screw (M4-0.7×5)	2	
ZMQ04012	螺絲	Screw (M4-0.7×12)	15	
ZMH03002	螺絲	Screw (M3-0.5×3)	1	
ZMJ08007	螺絲	Screw (M8-1.25×20)	4	
ZSB24003	螺絲	Screw (3/8-28×10)	1	
ZMJ05016	螺絲	Screw (M5-0.8 ×12)	2	
ZMQ04006	螺絲	Screw (M4-0.7×8)	1	

2.SST-C007D 外觀零件(2) MISCELLANEOUS COVERS(2)

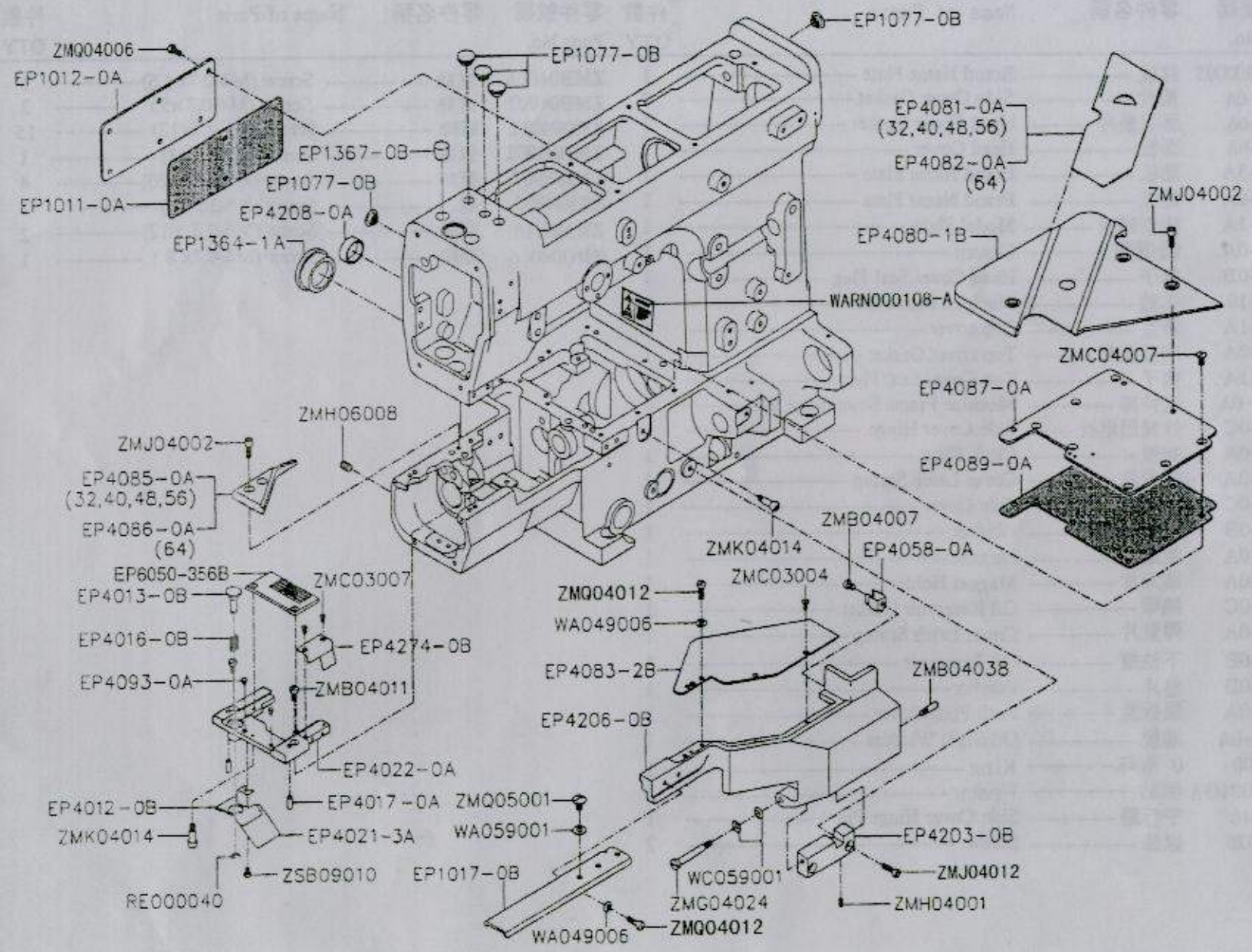

2. SST-C007D，外觀零件(2) MISCELLANOUS COVERS(2)

零件號碼 Parts No.	零件名稱	Name of Parts	件數 QTY
EP1011-0A	後蓋板墊	Rear Cover Gasket	1
EP1012-0A	後蓋板	Rear Cover	1
EP1017-0B	輔助板	Supplementary Front cover	1
EP1077-0B	塞子	Seal Plug	5
EP1364-1A	塞子	Seal Plug	1
EP1367-0B	塞子	Seal Plug	1
EP4021-3A	防油片	Oil Defender	1
EP4013-0B	按鈕	Feed Regulating push-button	1
EP4016-0B	彈簧	Feed Regulating push-button Spring	1
EP4022-0A	針板架組	Stitch Plate Support	1
EP4058-0A	彈簧片	Cover Latch Spring	1
EP4080-1B	平板組	Cloth Plate	1
EP4081-0A	滑動板	Slide Cover (32,40,48,56)	1
EP4082-0A	滑動板	Slide Cover (64)	1
EP4083-2B	前蓋板	Front Cover (Upper)	1
EP4085-0A	輔助板	Supplementary Slide Cover	1
EP4086-0A	輔助板	Supplementary Slide Cover (64)	1
EP4087-0A	油箱蓋	Crank Chamber Cover	1
EP4089-0A	墊片	Crank Chamber Cover Gasket	1
EP4093-0A	塞盖	Seal Plug	2
EP4203-0B	鉸鍊	Front Cover Hinge	1
EP4206-0B	前蓋板	Front Cover (Lower)	1
EP4208-0A	油蓋	Seal Plug	1
EP4274-0B	遮板	Plate	1
EP6050-356B	針板	Needle Plate	1
RE000040	扣環	Retaining Ring	1
WA049006	平墊圈	Washer	4
WA059001	平墊圈	Washer	2
WC059001	盤形彈簧墊圈	Conical Spring Washer	2
WARN00108-A	標貼	Paster	1
EP4017-0A	銷	Knock Pin	2
ZMB04007	螺絲	Screw (M4-0.7×5)	1
ZMB04011	螺絲	Screw (M4-0.7×8)	2
ZMJ04012	螺絲	Screw (M4-0.7×16)	2

零件號碼 Parts No.	零件名稱	Name of Parts	件數 QTY	備注 Remarks
ZMQ04012	螺絲	Screw (M4-0.7×12)	4	
ZMB04038	螺絲	Screw (M4-0.7×8)	1	
ZMC03004	螺絲	Screw (M3-0.5×6)	3	
ZMC03007	螺絲	Screw (M3-0.6×4.1)	2	
ZMC04007	螺絲	Screw (M4-0.7×7.3)	7	
ZMG04024	螺絲	Screw (M4-0.7×8)	1	
ZMH04001	螺絲	Screw (M4-0.7×4)	1	
ZMH06008	螺絲	Screw (M6-1×6)	1	
ZMJ04002	螺絲	Screw (M4-0.7×12)	5	
ZMK04014	螺絲	Screw (M4-0.7×5)	2	
ZMQ05001	螺絲	Screw (M5-0.8×8)	2	
ZSB09010	螺絲	Screw	1	
ZMQ04006	螺絲	Screw (M4-0.7× 8)	6	

3.8ST-C007D 綫道機構 MISCELLANEOUS THREAD EYELETS

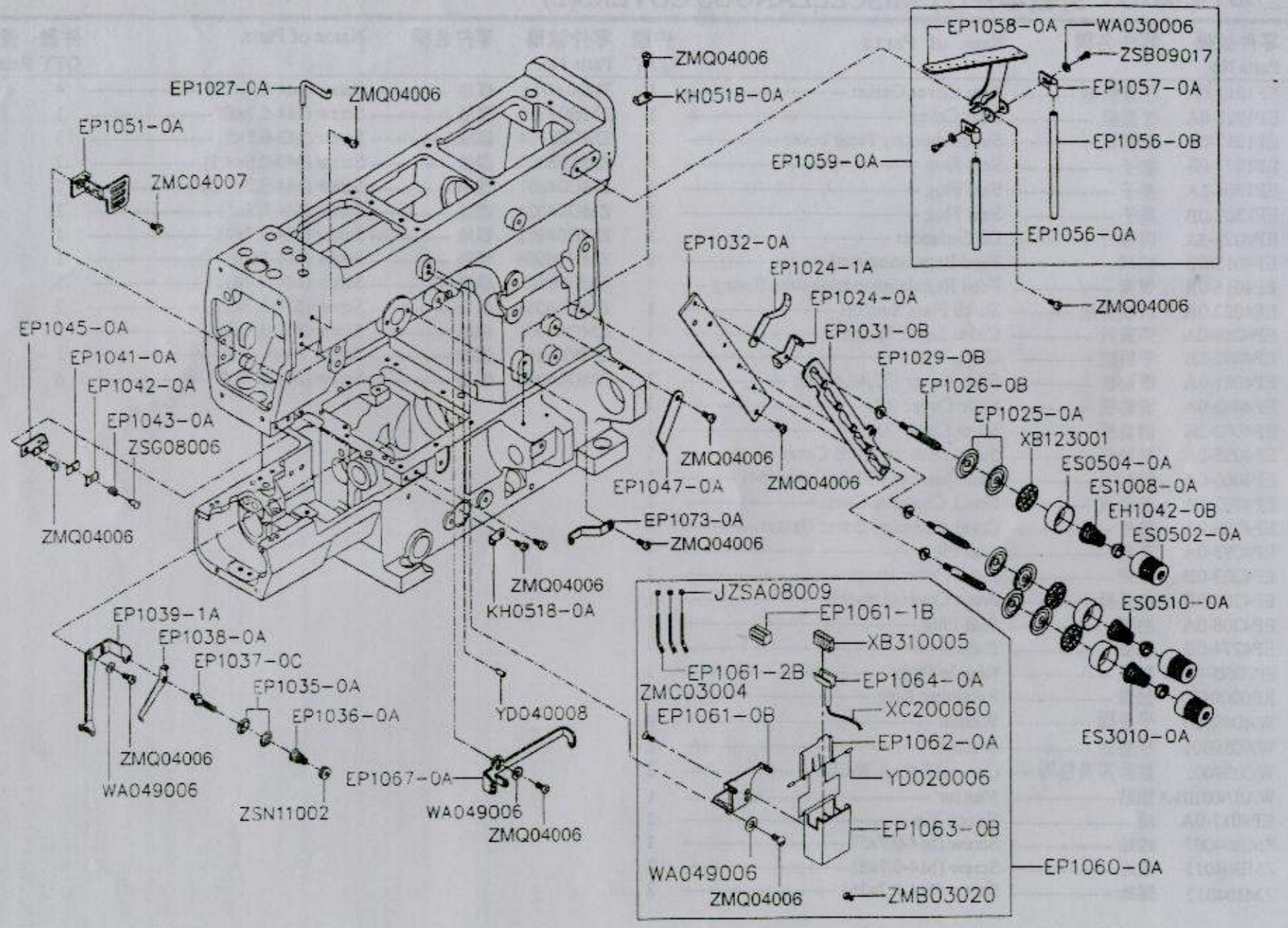

3. SST-C007D) 綫道機構 MISCELLANOUS THREAD EYELETS

零件號碼 Parts No.	零件名稱	Name of Parts	件數 QTY
EH1042-0B	彈簧座	Adjusting Ratchet	5
EP1073-0A	線掛	Top Cover Thread Eyelet (Left)	1
EP1027-0A	導線棒	Needle Thread Guide	1
EP1024-0A	導線片	Tension Disc Eyelet	5
EP1024-1A	導線片	Thread Lead-in Guide	5
EP1025-0A	壓線盤	Tension Disc	10
EP1026-0B	調整螺絲棒	Tension Post	5
EP1029-0B	套管	Tension Post Ferrule	5
EP1031-0B	調節板	Tension Disc Separator	1
EP1032-0A	固定板	Tension Post Support	1
EP1035-0A	壓線盤	Supplementary Tension Disc	2
EP1036-0A	彈簧	Supplementary Tension Spring	1
EP1037-0C	調整螺絲棒	Tension Post	1
EP1038-0A	線掛	Supplementary Thread Guide	1
EP1039-1A	導線座	Top Cover Thread Guide	1
EP1041-0A	小調子板	Thread Retainer Disc Support	1
EP1042-0A	小調子盤	Needle Thread Retainer Disc	1
EP1043-0A	彈簧	Needle Thread Retainer Spring	1
EP1045-0A	小調子臺	Needle Thread Retainer Support	1
EP1047-0A	線掛	Looper Thread Eyelet (Long)	1
EP1051-0A	線掛	Needle Thread Take-up Guard	1
EP1056-0A	導線管	Thread Eyelet Pipe (Short)	1
EP1056-0B	導線管	Thread Eyelet Pipe (Short)	1
EP1057-0A	導線管固定座	Thread Eyelet Pipe Stay	2
EP1058-0A	線掛	Thread Guide Plate	1
EP1059-0A	線掛組	Thread Guide, Complete Set	1
EP1060-0A	油壺組	SP Device, Complete Set	1
EP1061-0B	綫挂	Needle Thread Eyelet	1
EP1061-1B	連接塊	Block	1
EP1061-2B	過綫杆	Thread Eyelet Support	3
EP1062-0A	油壺蓋	SP Container Lid	1
EP1063-0B	油壺	SP Container	1
EP1064-0A	油棉座	SP Felt Stay	1

零件號碼 Parts No.	零件名稱	Name of Parts	件數 QTY	備注 Remarks
EP1067-0A	線掛	Top Cover Thread Eyelet (Right)	1	
ES0502-0A	調整螺帽	Thread Tension	5	
ES0504-0A	外殼	Disc Cover	5	
ES0510-0A	彈簧	Top Cover Thread Tension Spring	1	
ES1008-0A	彈簧	Needle Thread Tension Spring	3	
ES3010-0A	彈簧	Looper Thread Tension Spring	1	
KH0518-0A	線掛	Supplementary Thread Guide	2	
WA030006	平墊圈	Washer	2	
WA049006	平墊圈	Washer	4	
XB123001	油棉	Felt	5	
XB310005	油棉	Felt	1	
XC200060	油棉	Felt	1	
YD020006	銷	Pin	2	
YD040008	銷	Guide Pin	1	
ZMB03020	螺絲	Screw (M3-0.5×5)	2	
ZMQ04006	螺絲	Screw (M4-0.7×8)	15	
ZMC03004	螺絲	Screw (M3-0.5×8)	2	
ZMC04007	螺絲	Screw (M4-0.7×4.5)	1	
JZSA08009	螺絲	Screw (1/8-4.4×2.4)	3	
ZSB09017	螺絲	Screw (9/64-40×7)	2	
ZSG08006	螺絲	Screw (1/8-44×2.2)	1	
ZSN11002	螺帽	Nut	1	

4. SST-C007D 套管零件 MISCELLANEOUS BUSHINGS

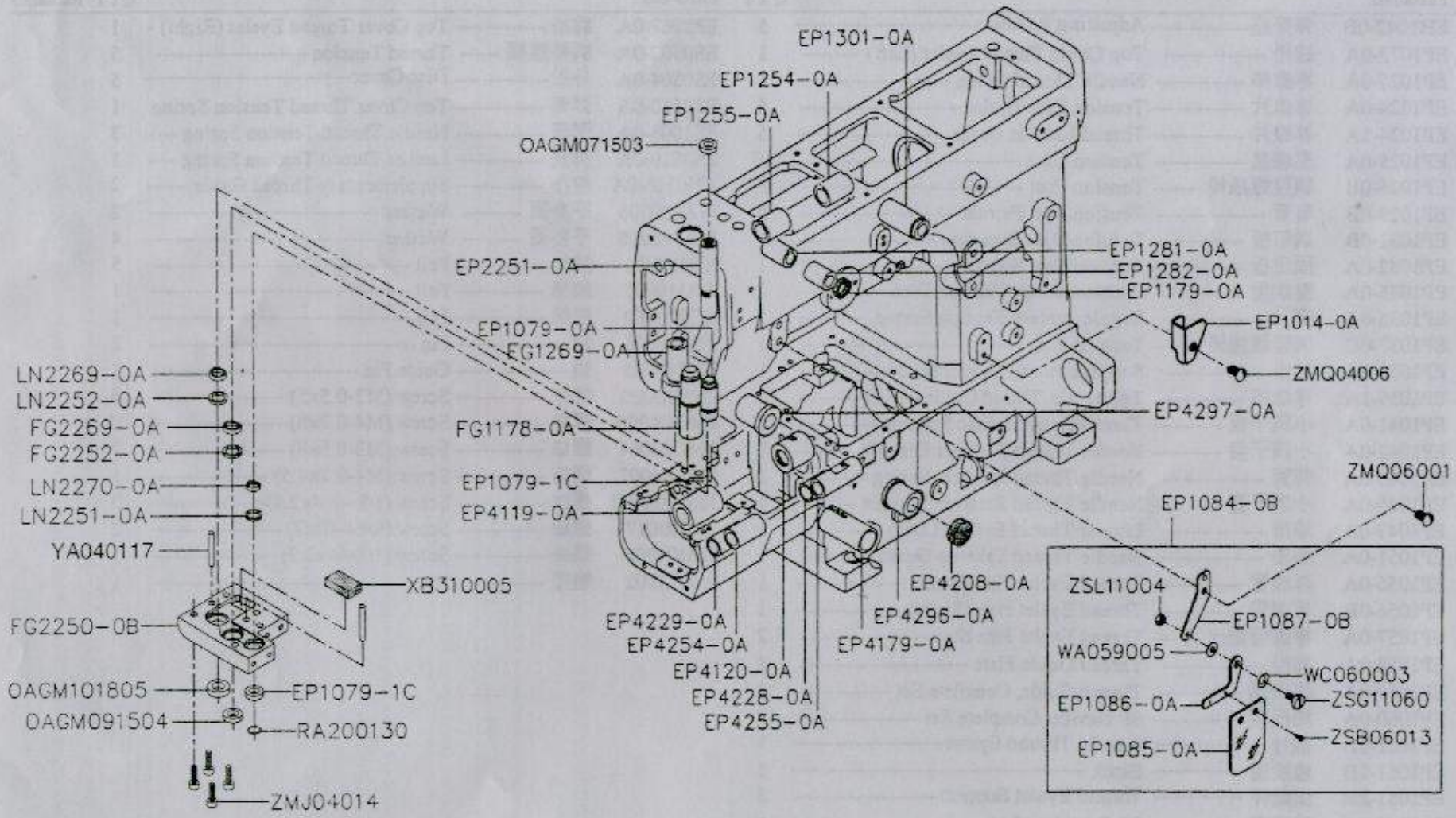

4. SST-C007D 套管機構 MISCELLANOUS BUSHINGS

零件號碼 Parts No.	零件名稱	Name of Parts	件數 QTY
EP2251-0A	套管	Needle Bar Bushing (Upper)	1
EP1079-0A	套管	Needle Bar Bushing (Lower)	1
EP1079-1C	油封	Oil Seal	1
EP1084-0B	安全鏡片組	Eye Guard, Complete Set	1
EP1085-0A	安全鏡片	Eye Guard	1
EP1086-0A	搖動臂	Eye Guard Holder	1
EP1087-0B	固定片	Eye Guard Support	1
FG1178-0B	套管	Presser Bar Bushing	1
EP1179-0A	油封	Oil Seal	2
EP1254-0A	套管	Spreader Driving Shaft Bushing (Right)	1
EP1255-0A	套管	Spreader Driving Shaft Bushing (Left)	1
FG1269-0A	套管	Spreader Driving Bar Bushing	1
EP1014-0A	綫道蓋	Cover	1
EP1281-0A	套管	Needle Thread Take-up Bushing (Rear)	1
EP1282-0A	套管	Needle Thread Take-up Bushing	1
EP1301-0A	套管	Foot Lifter Lever Bushing	1
EP4119-0A	套管	Lower Shaft Bushing (Left)	1
EP4120-0A	套管	Lower Shaft Bushing (Right)	1
EP4179-0A	套管	Adjusting Screw Bushing	1
EP4228-0A	套管	Differential Feed Bar Shaft Bushing	1
EP4229-0A	套管	Differential Feed Bar Shaft Bushing	1
EP4254-0A	套管	Feed Bar Lift Shaft Bushing (Left)	1
EP4255-0A	套管	Feed Bar Lift Shaft Bushing (right)	1
EP4296-0A	套管	Looper Driving Shaft Bushing (Front)	1
EP4297-0A	套管	Looper Driving Shaft Bushing (Rear)	1
WA059005	平墊圈	Washer	1
WC060003	盤形彈簧墊圈	Conical Spring Washer	1
EP1079-1C	套管	Oil Seal	1
FG2252-0A	油防勘	Oil Seal	1
FG2269-0A	油封	Oil Seal	1
FG2250-0A	防油座	Oil Seal	1
LN2251-0A	防油圈	Oil Seal	1
LN2252-0A	防油圈	Oil Seal	1
LN2269-0A	油封	Oil Seal	1
LN2270-0A	油封	Oil Seal	1

零件號碼 Parts No.	零件名稱	Name of Parts	件數 QTY	備注 Remarks
OAGM071503	油封	Oil Seal	1	
OAGM101805	油封	Oil Seal	1	
OAGM091504	油封	Oil Seal	1	
RA8200130	扣環	Ring	1	
XB310005	油棉	Felt	1	
YA040117	油棉	Felt	2	
ZMJ04014	螺絲	Screw (M4-0.7 X 14)	4	
ZMQ06001	螺絲	Screw (M6-1×10)	1	
ZSB06013	螺絲	Screw (3/32-56×4.2)	2	
ZSG11060	螺絲	Screw (11/64-40×9.7)	1	
ZSL11004	螺帽	Nut	1	
ZMQ04006	螺絲	Screw (M4-0.7×8)	1	

5. SST-C007D 主軸傳動機構 MAIN SHAFT DRIVING MECHANISM

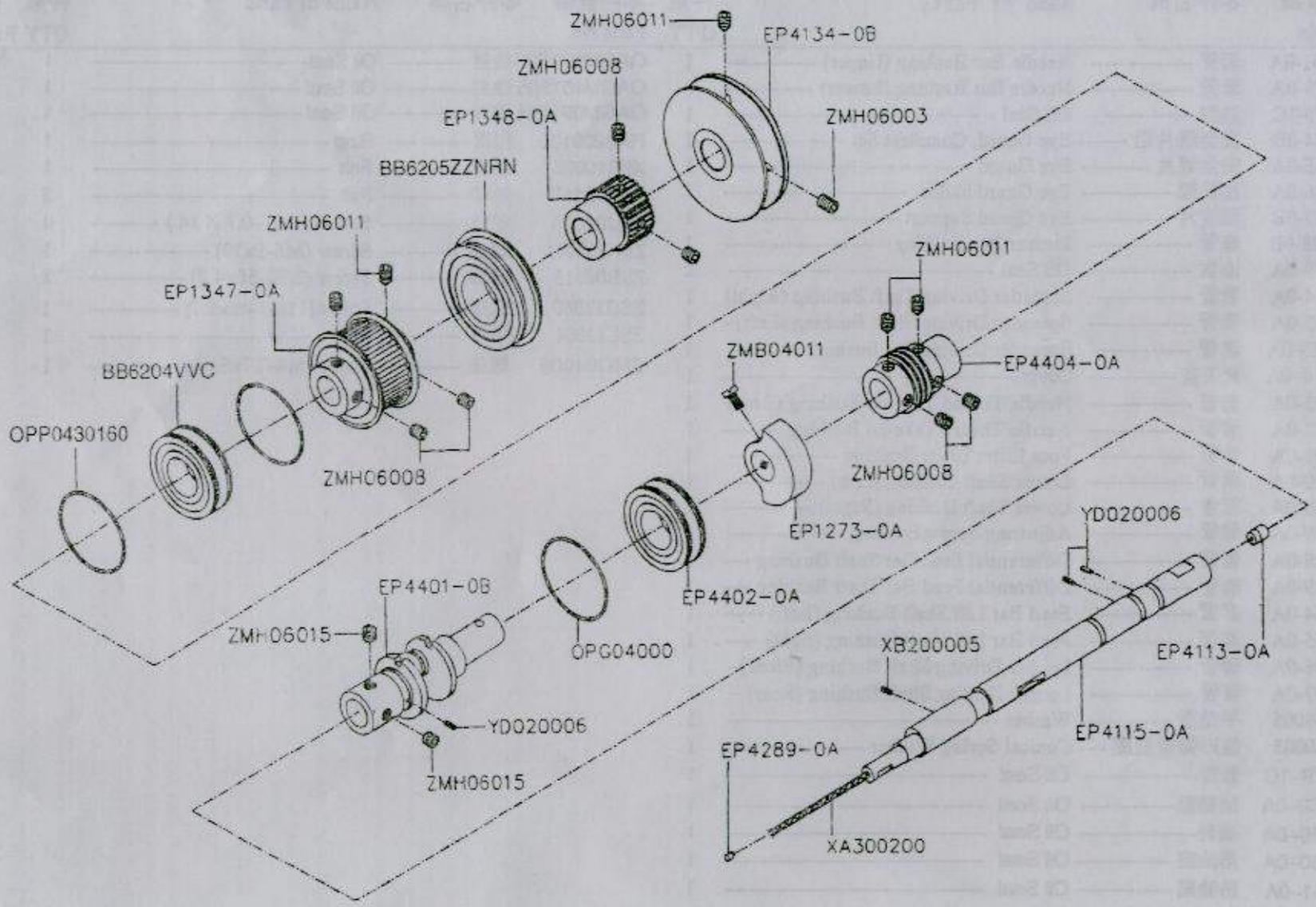

5. SST-C007D 主軸傳動機構 MAIN SHAFT DRIVING MECHANISM

零件號碼 Parts No.	零件名稱	Name of Parts	件數 QTY	零件號碼 Parts No.	零件名稱	Name of Parts	件數 QTY	備注 Remarks
BB6204VVC	滾珠軸承	Ball Bearing (Middle)	1					
BB6205ZZNRN	滾珠軸承	Ball Bearing (Right)	1					
EP1273-0A	平衡塊	counterweight (Small)	1					
EP1347-0A	齒型皮帶輪組	Main Shaft Pulley (Lower)	1					
EP1348-0A	齒型皮帶輪	Main Shaft Pulley	1					
EP4113-0A	塞子	Seal Plug	1					
EP4115-0A	下軸(左)	Lower Shaft (Left)	1					
EP4134-0B	皮帶輪	Pulley	1					
EP4289-0A	塞子	Seal Plug	1					
EP4401-0B	曲柄軸	Lower crankshaft	1					
EP4402-0A	滾珠軸承	Ball Bearing (Left)	1					
EP4404-0A	蝸桿	Oil Pump Driving Worm	1					
OPG04000	O型環	O-ring	2					
OPP0430160	O型環	O-ring	2					
XA300200	油棉	Oil Wick	1					
XB200005	油棉	Oil Wick	2					
YD020006	彈簧銷	Roll Pin	3					
ZMB04011	螺絲	Screw (M4-0.7×8)	2					
ZMH06003	螺絲	Screw (M6-1×8)	1					
ZMH06008	螺絲	Screw (M6-1×6)	7					
ZMH06011	螺絲	Screw (M6-1×8)	4					
ZMH06015	螺絲	Screw (M6-1×4.8)	2					

6. SST-C007D 收綫機構 THREAD TAKE-UP MECHANISM

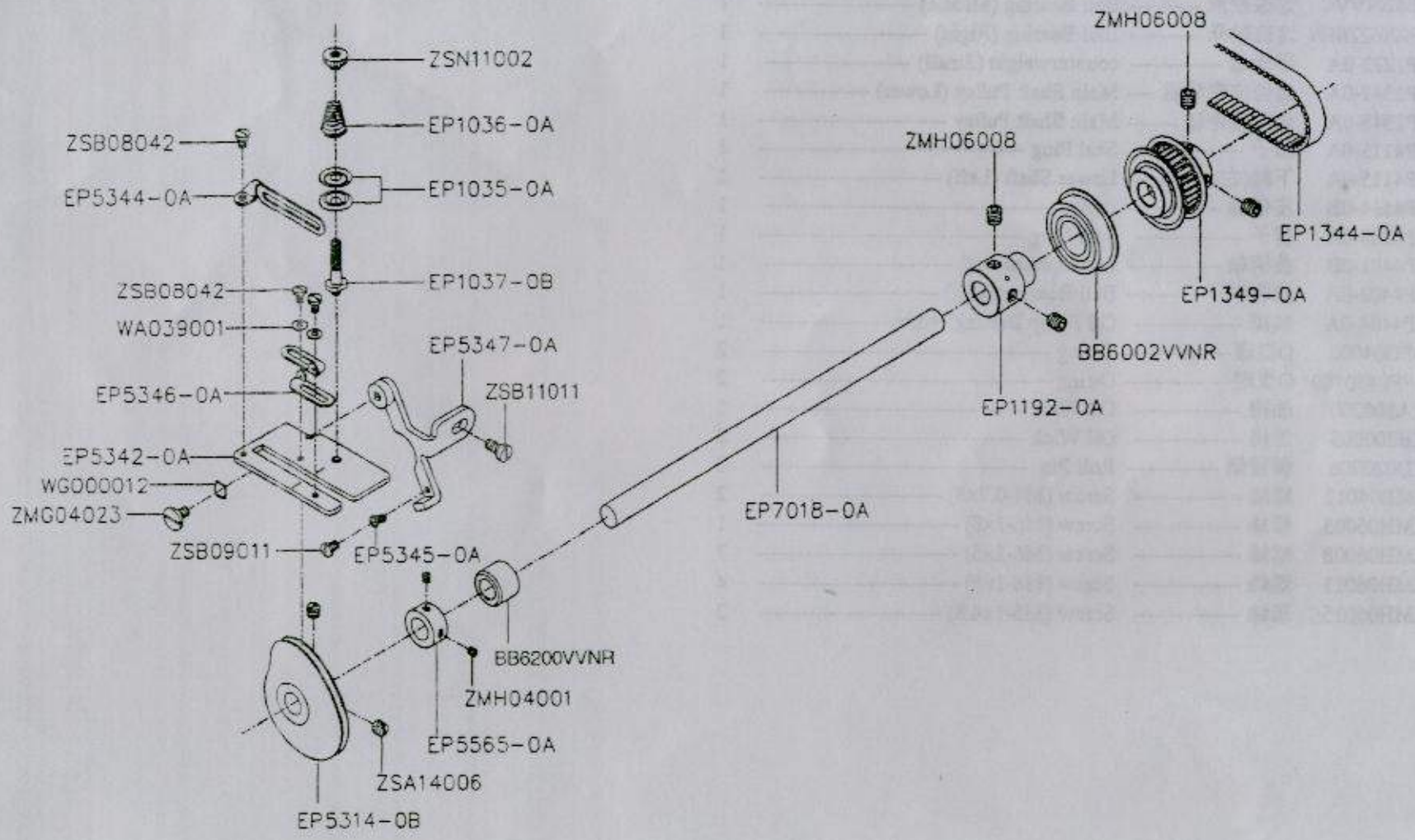

6. 6ST-C007D) 收綫機構 THREAD TAKE-UP MECHANISM

零件號碼 Parts No.	零件名稱	Name of Parts	件數 QTY	零件號碼 Parts No.	零件名稱	Name of Parts	件數 QTY	備注 Remarks
BB6200VVNR	滾珠軸承	Ball Bearing	1					
EP1035-0A	壓線盤	Tension Disc	2					
EP1036-0A	彈簧	Spring	1					
EP1037-0B	調整螺絲棒	Tension Post	1					
EP1192-0A	套管	Adjusting Screw Bushing	1					
EP1344-0A	齒型皮帶	Timing Belt	1					
EP1349-0A	齒型皮帶輪	Main Shaft Pulley	1					
EP5314-0B	下勾綫凸輪組	Supporting Plate Basement	1					
EP5342-0A	支持板	Supporting Plate	1					
EP5344-0A	支持板	Supporting Plate	1					
EP5345-0A	卡簧	Spring	1					
EP5346-0A	線掛	Thread Take-up Eyelet (Right)	2					
EP5347-0A	導板座組	Cast-off Plate	1					
EP5565-0A	套環	Collar	1					
EP7018-0A	軸	Washer	1					
BNTA1020Z	軸承	Bearing	1					
WA039001	墊圈	Washer	2					
WG000012	墊圈	Washer	1					
ZMG04023	螺絲	Screw	1					
ZMH06008	螺絲	Screw	4					
ZSB08042	螺絲	Screw	3					
ZSB09011	螺絲	Screw	1					
ZSB11011	螺絲	Screw	1					
ZMH04001	螺絲	Screw	2					
ZSA14006	螺絲	Screw	2					
ZSN11002	螺帽	Nut	1					

7. SST-C007D 上軸機構 UPPER SHAFT MECHANISM

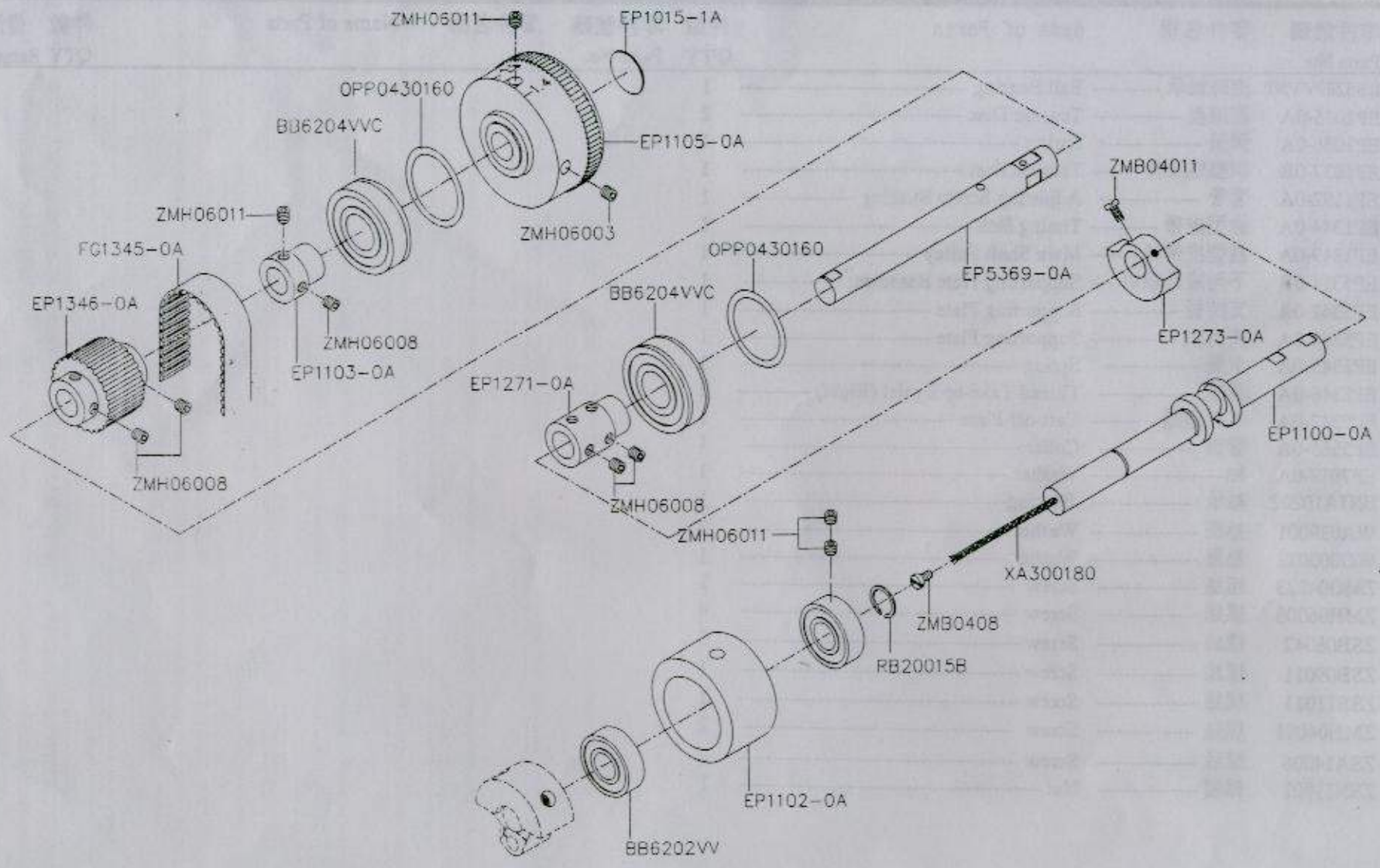

7. SST-C007D 上軸機構 UPPER SHAFT MECHANISM

零件號碼 Parts No.	零件名稱	Name of Parts	件數 QTY	零件號碼 Parts No.	零件名稱	Name of Parts	件數 QTY	備注 Remarks
BB6202VV	滾珠軸承	Ball Bearing	2					
BB6204VVC	滾珠軸承	Ball Bearing	2					
EP1015-1A	圓形銘板	Handwheel Mark	1					
EP1100-1A	曲軸	Upper Crankshaft	1					
EP1102-0A	軸承套管	Bushing	1					
EP1103-0A	上軸套管	Handwheel Adapter	1					
EP1105-0A	手輪	Handwheel	1					
EP1271-0A	連結器	Upper Shaft Joint	1					
EP1273-0A	平衡塊	counterweight (Small)	1					
FG1345-0A	齒型皮帶	Timing Belt	1					
EP1346-0A	齒型皮帶輪	Timing Belt	1					
EP5369-0A	上軸	Upper Shaft	1					
OPP0430160	環	Ring	2					
RB20015B	外扣環	Retaining Ring	1					
XA300180	油棉	Oil Wick	1					
ZMB04008	螺絲	Screw (M4-0.7×6)	1					
ZMB04011	螺絲	Screw (M4-0.7×8)	2					
ZMH06003	螺絲	Screw (M6-1×8)	1					
ZMH06008	螺絲	Screw (M6-1×6)	9					
ZMH06011	螺絲	Screw (M6-1×8)	4					

8. SST-C007D 針線收線機構 NEEDLE THREAD TAKE-UP MECHANISM

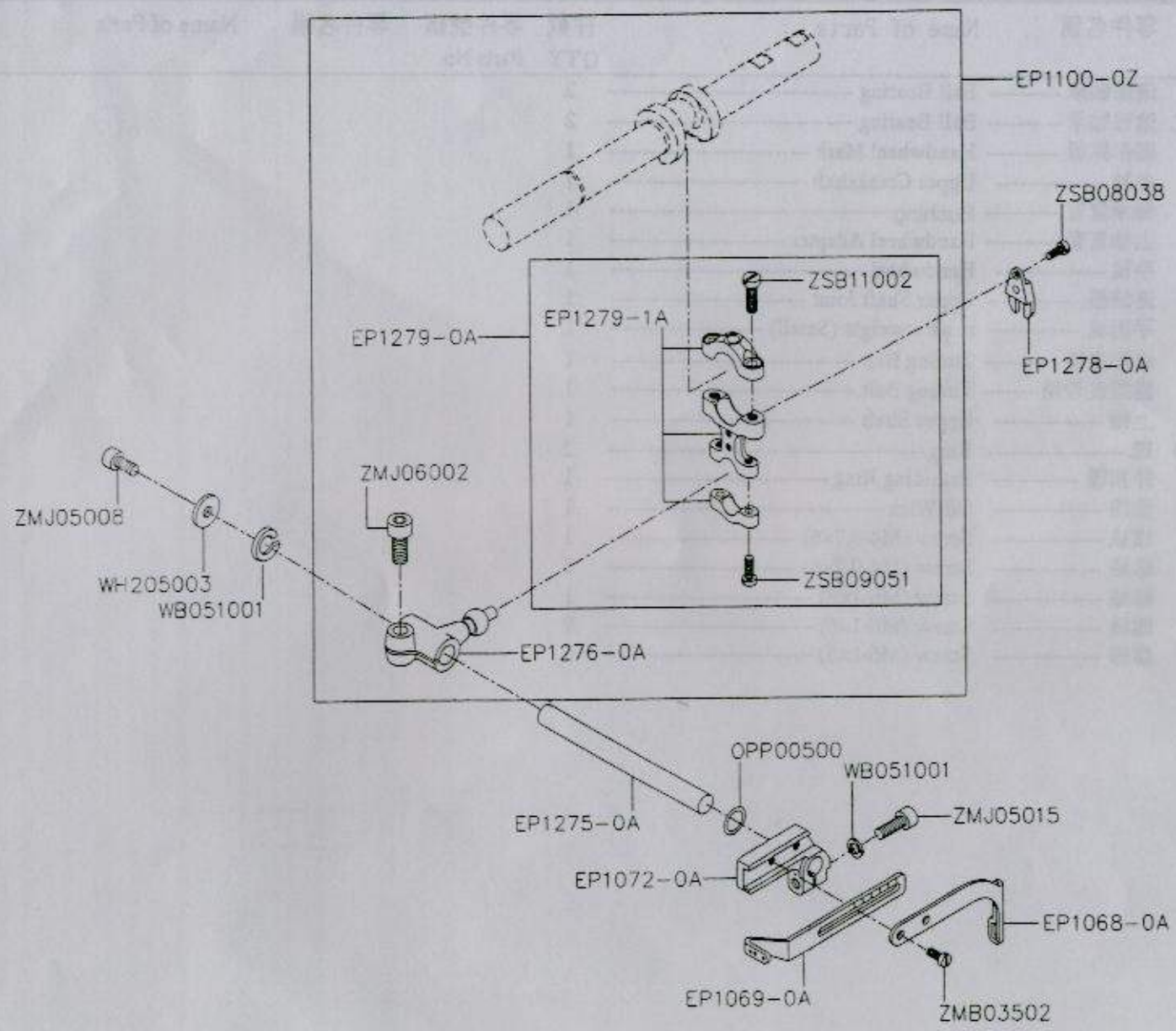

8. SST-C007D 針綫收綫機構 NEEDLE THREAD TAKE-UP MECHANISM

零件號碼 Parts No.	零件名稱	Name of Parts	件數 QTY	零件號碼 Parts No.	零件名稱	Name of Parts	件數 QTY	備注 Remarks
EP1068-0A	緊線具	Top Cover Thread Take-up	1					
EP1069-0A	線掛	Needle Thread Take-up	1					
EP1072-0A	固定架	Bracket	1					
EP1100-0Z	曲軸組	Upper Crankshaft, Complete Set	1					
EP1275-0A	軸	Driving Shaft	1					
EP1276-0A	驅動腕	Driving Lever	1					
EP1278-0A	導板	Guide Fork	1					
EP1279-0A	球接頭組	Connecting Rod, Complete Set	1					
EP1279-1A	球接頭	Connecting Rod	1					
WB051001	彈簧墊圈	Spring Washer	2					
WH205003	平墊圈	Washer	1					
OPP00500	O 形環	Ring	1					
ZMB03502	螺絲	Screw (M3.5-0.6×8)	2					
ZMJ05015	螺絲	Screw (M5-0.8 ×14)	1					
ZMJ05008	螺絲	Screw (M5-0.8×10)	1					
ZMJ06002	螺絲	Screw (M6-1×15)	1					
ZSB08038	螺絲	Screw (1/8-44×7.9)	2					
ZSB09051	螺絲	Screw (9/64-40×10.3)	2					
ZSB11002	螺絲	Screw (11/64-40×14)	2					

9. SST-C007D 針棒機構 NEEDLE BAR MECHANISM

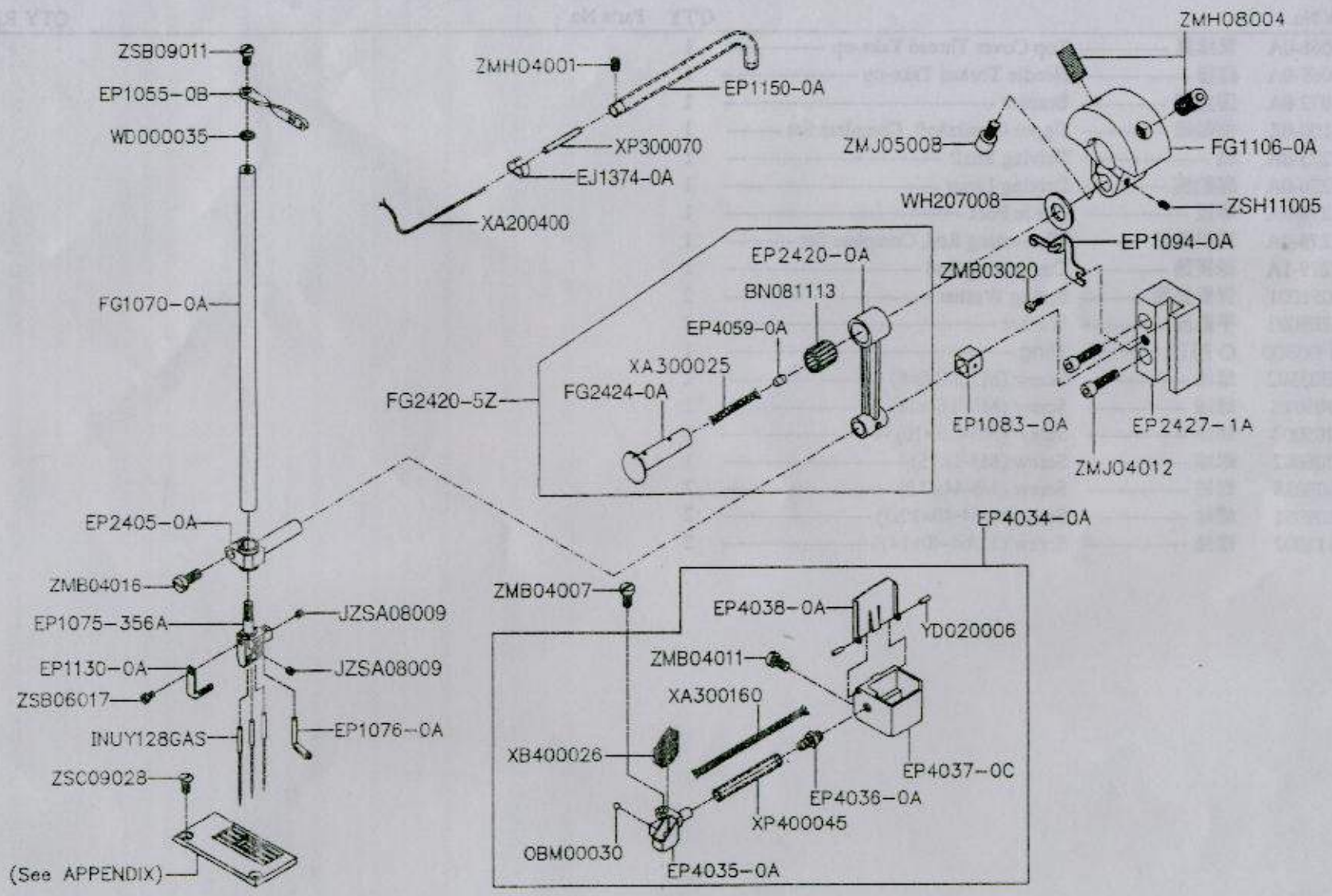

9. SST-C007D；針棒機構 NEEDLE BAR MECHANISM

零件號碼 Parts No.	零件名稱	Name of Parts	件數 QTY	零件號碼 Parts No.	零件名稱	Name of Parts	件數 QTY	備注 Remarks
BN081113	滾針軸承	Roller Bearing	1	ZMB04011	螺絲	Screw (M4-0.7×8)	2	
FG1070-0A	針棒	Needle Bar	1	ZMH04001	螺絲	Screw (M4-0.7×4)	1	
EP2405-0A	針棒固定器	Needle Bar Bracket	1	ZMH08004	螺絲	Screw (M8-1×16)	2	
EP1076-0A	線掛	Top Cover Thread Eyelet	1	ZMJ04032	螺絲	Screw (M4-0.7×16)	2	
EP2427-1A	導槽	Needle Bar Guide	1	ZMJ05008	螺絲	Screw (M5-0.8×10)	1	
EP1083-0A	滑塊	Slide Block	1	JZSA08009	螺絲	Screw (1/8-44×2.4)	4	
FG1106-0A	凸輪	Counterweight	1	ZSB09011	螺絲	Screw (9/64-40×5.6)	1	
EP1130-0A	線掛	Needle Thread Eyelet	1	ZSB06017	螺絲	Screw (3/32-56×4)	1	
EP2420-0A	連桿	Connecting Rod	1	ZMB04016	螺絲	Screw (M4-0.7×10)	1	
FG2420-5Z	連桿組	Connecting Rod, Complete Set	1	ZSC09028	螺絲	Screw (9/64-40×7)	2	
EP4059-0A	鋁塞	Seal Plug	1	ZSH11005	螺絲	Screw (9/64-40×7)	1	
FC2424-0A	連桿銷	Connecting Rod Pin	1	ZMB03020	螺絲	Screw (M3-0.5×5)	1	
EP1055-0B	綫挂	Thread Eyelet	1					
EP1050-0A	給油管	Oil Bushing	1					
EP1075-356A	針鐶	Needle Holder	1					
EJ1374-0A	夾綫條	Clip	1					
EP1150-0A	給油管	Oil Bushing	1					
EP4034-0A	油壺組	HR Device, Complete Set	1					
EP4035-0A	油棉杯	HR Cup	1					
EP4036-0A	接頭	Pipe Joint	1					
EP4037-0C	油壺	HR Container	1					
EP4038-0A	油壺蓋	HR Container Lid	1					
EP1094-0A	油心支架	Bracket	1					
INUY128GA	針	Needle	3					
OBM00030	鋼珠	Seal Plug	1					
WD000035	墊圈	Connecting Rod Ring	1					
WH207008	墊圈	Connecting Rod Ring	1					
XA200400	油綫	Oil Wick	1					
XA300025	油棉	Oil Wick	1					
XA300160	油棉	Felt	1					
XB400026	油棉	HR Felt	1					
XP300070	油管	Oil Tube	1					
XP400045	油管	Oil Tube	1					
YD020006	彈簧銷	Roll Pin	2					
ZMB04007	螺絲	Screw (M4-0.7×8)	1					

10. SST-C007D) 壓腳機構 PRESSER FOOT MECHANISM

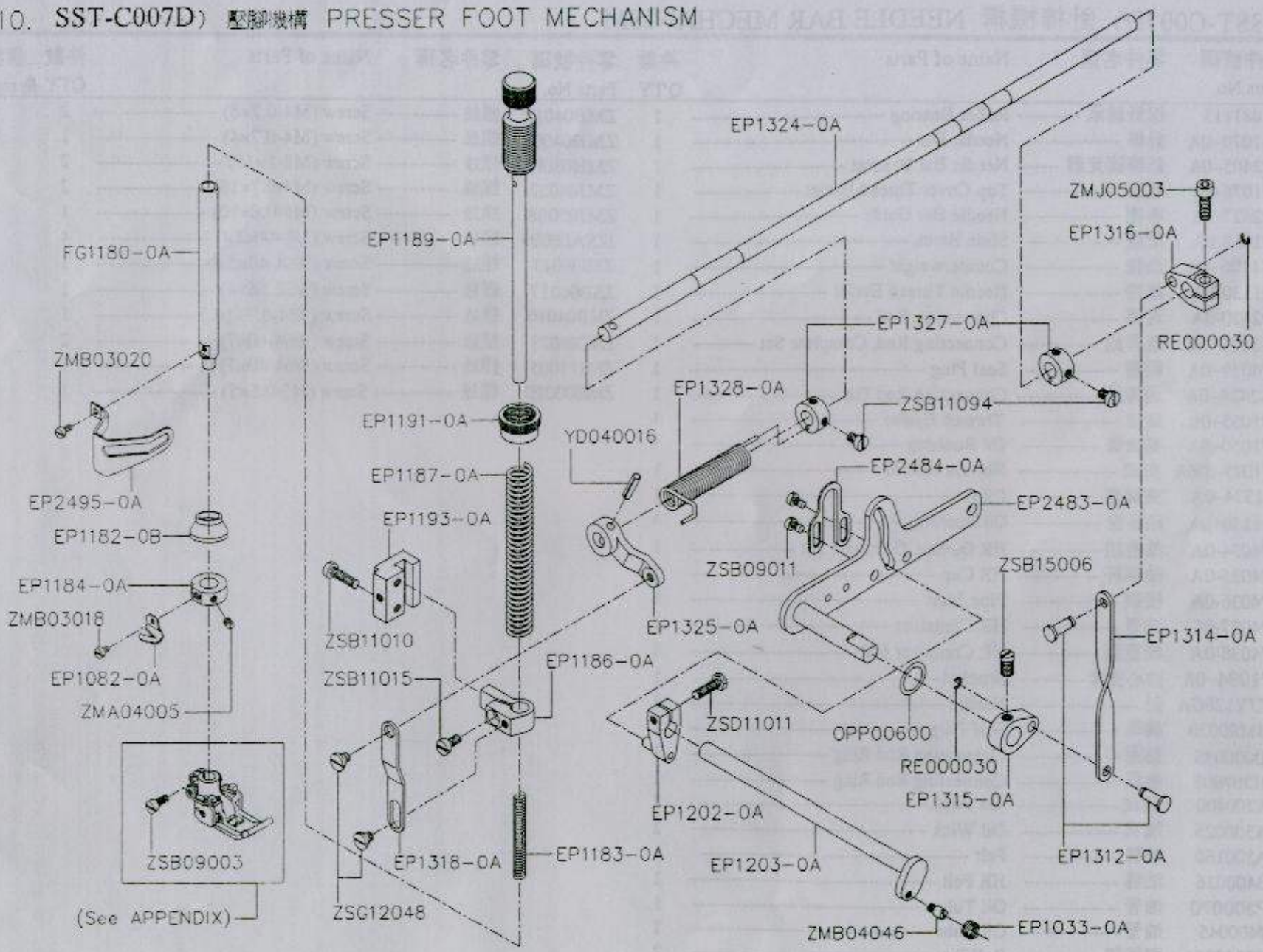

10. SST-C007D 壓脚機構 PRESSER FOOT MECHANISM

零件號碼 Parts No.	零件名稱	Name of Parts	件數 QTY	零件號碼 Parts No.	零件名稱	Name of Parts	件數 QTY	備注 Remarks
EP2495-0A	保護罩	Finger Guard	1	ZSB09003	螺絲	Screw (9/64-40×10)	1	
EP1033-0A	彈簧	Swing-proof Spring	1	ZSB09011	螺絲	Screw (9/64-40×5.6)	2	
EP1082-0A	切刀	Thread Chain Cutting Knife	1	ZSB11010	螺絲	Screw (11/64-40×16)	2	
FG1180-0A	壓棒	Presser Bar	1	ZSB11015	螺絲	Screw (11/64-40×8.3)	1	
EP1182-0B	防油圈	Oil Protector Ring	1	ZSB11094	螺絲	Screw (11/64-40×5.5)	4	
EP1183-0A	彈簧	Presser Bar Spring (Inner)	1	ZSB15006	螺絲	Screw (15/64-28×9.5)	1	
EP1184-0A	套環	Collar	1	ZSD11011	螺絲	Screw (11/64-40×14.5)	1	
EP1186-0A	壓棒定位器	Presser Bar Connecting Bracket	1	ZSG12048	螺絲	Screw (3/16-32×2.2)	2	
EP1187-0A	彈簧	Presser Bar Spring (Outer)	1					
EP1189-0A	彈簧導桿	Presser Spring Regulator	1					
EP1191-0A	螺母	Lock Nut	1					
EP1193-0A	滑槽	Presser Bar Guide	1					
EP1202-0A	搖動臂	Tension Release Lever	1					
EP1203-0A	擺動軸組	Tension Release Shaft	1					
EP2483-0A	控制臂	Lifter Lever	1					
EP2484-0A	擋板	Lifter Lever Stop	1					
EP1312-0A	銷	Connecting Pin	2					
EP1314-0A	連接片	Connecting Plate	1					
EP1315-0A	搖臂	Lifter Lever (Small)	1					
EP1316-0A	搖臂	Intermediate Lever	1					
EP1318-0A	吊升連接片	Lifter Link	1					
EP1324-0A	軸	Lifter Shaft	1					
EP1325-0A	搖臂	Lifter Link Lever	1					
EP1327-0A	套環	Collar	2					
EP1328-0A	彈簧	Lifter Spring	1					
OPP00600	O 形環	Ring	1					
RE000030	E型扣環	Retainer Ring	2					
YD040016	彈簧銷	Fastener Pin	1					
ZMA04005	螺絲	Screw (M4-0.7×4)	2					
ZMB03018	螺絲	Screw (M3-0.5×3.5)	1					
ZMB03020	螺絲	Screw (M3-0.5×5)	1					
ZMB04046	螺絲	Screw (M4-0.7×3.8)	1					
ZMJ05003	螺絲	Screw (M5-0.8×15)	1					

11. SST-C007D 裝飾線機構 SPREADER MECHANISM

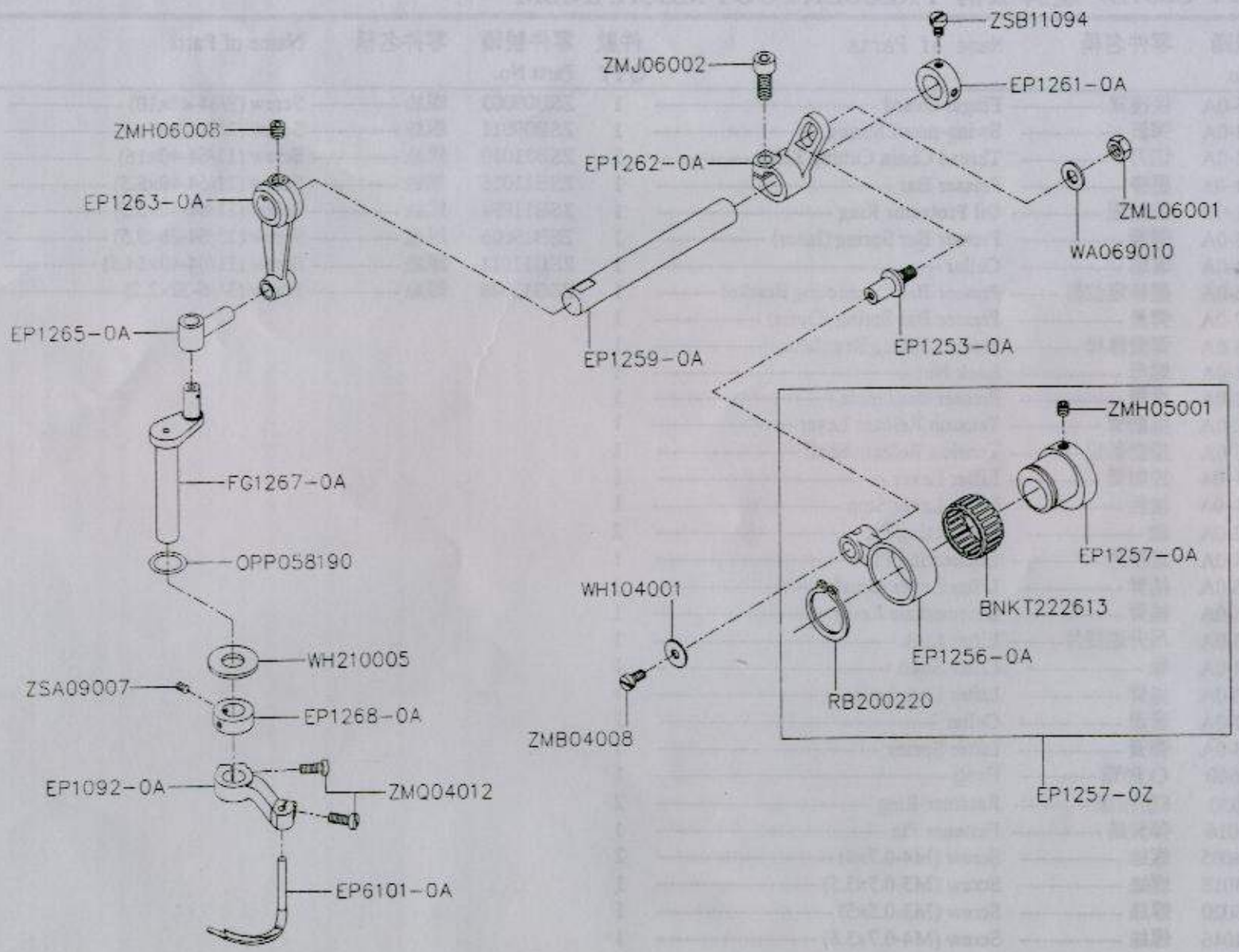

11. SST-C007D. 裝飾綫機構 SPREADER MECHANISM

零件號碼 Parts No.	零件名稱	Name of Parts	件數 QTY	零件號碼 Parts No.	零件名稱	Name of Parts	件數 QTY	備注 Remarks
BNKT222613	滾針軸承	Roller Bearing	1					
EP1092-0A	鉤線具座	Spreader Holder	1					
EP1253-0A	搖臂銷	Adjusting Lever Pin	1					
EP1256-0A	偏心連桿	Connecting Rod	1					
EP1257-0A	鉤線偏心	Eccentric	1					
EP1257-0Z	偏心連桿組	Connecting Rod, Complete Set	1					
EP1259-0A	軸	Driving Shaft	1					
EP1261-0A	套環	Collar	1					
EP1262-0A	搖臂	Adjusting Lever	1					
EP1263-0A	連桿	Rocking Arm	1					
EP1265-0A	連桿銷	Rocking Pin	1					
FG1267-0A	擺動軸	Spreader Bar	1					
EP1268-0A	套環	Collar	1					
EP6101-0A	上彎針	Spreader	1					
OPP058190	O 形環	Ring	1					
RB200220	外扣環	Retainer Ring	1					
WA069010	平墊圈	Washer	1					
WH104001	平墊圈	Washer	1					
WH210005	平墊圈	Bushing Ring	1					
ZMB04008	螺絲	Screw (M4-0.7×6)	1					
ZMQ04012	螺絲	Screw (M4-0.7×12)	2					
ZMH05001	螺絲	Screw (M5-0.8×5)	2					
ZMH06008	螺絲	Screw (M6-1×6)	2					
ZMJ06002	螺絲	Screw (M6-1×15)	1					
ZML06001	螺帽	Nut (M6-1)	1					
ZSB11094	螺絲	Screw (11/64-40×5.5)	2					
ZSA09007	螺絲	Screw (9/64-40×4)	2					

12.SST-C007D 勾針驅動機構(1) LOOPER DRIVING MECHANISM(1)

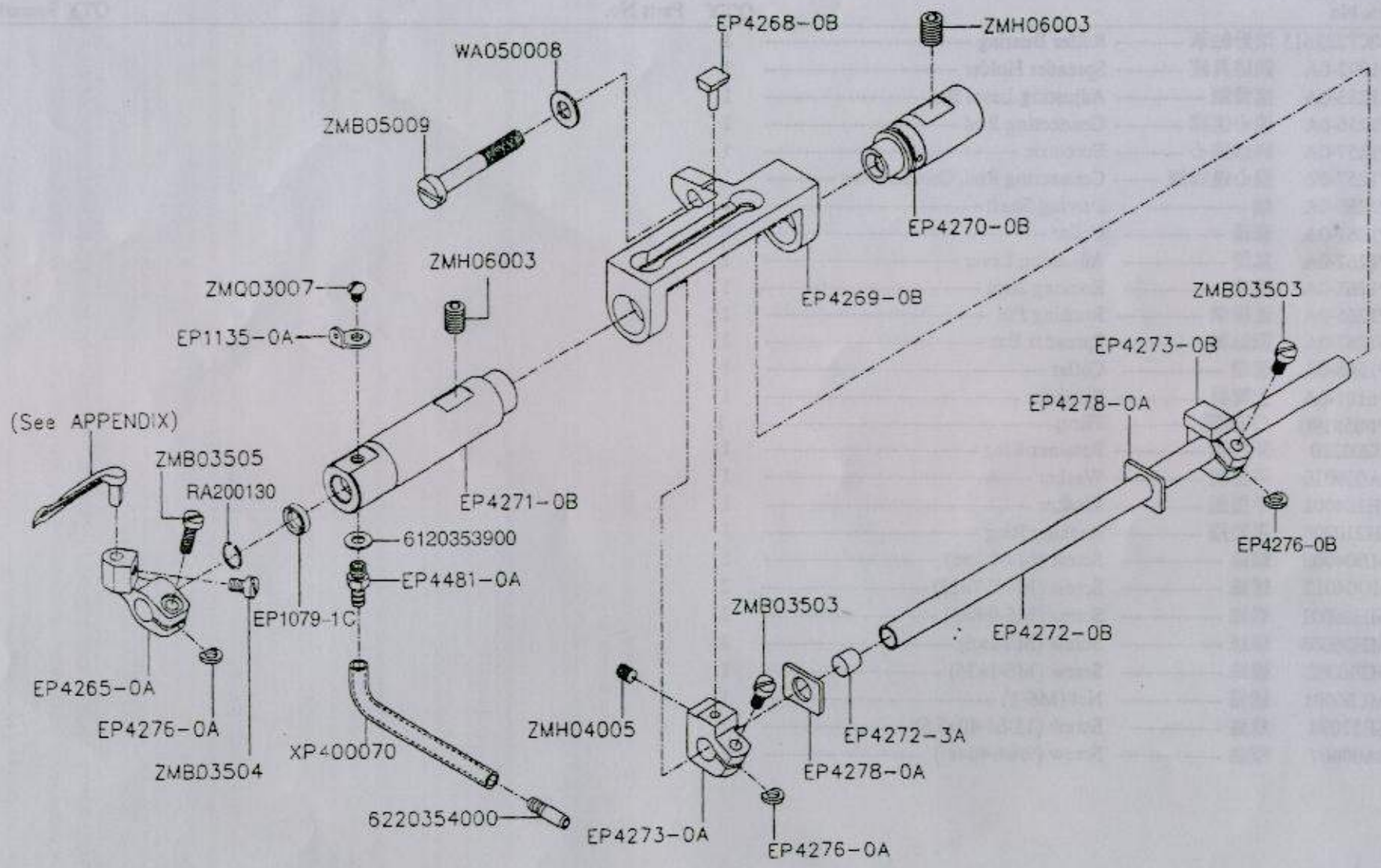

12. SST-C007D 勾針驅動機構(1) LOOPER DRIVING MECHANISM(1)

零件號碼 Parts No.	零件名稱	Name of Parts	件數 QTY	零件號碼 Parts No.	零件名稱	Name of Parts	件數 QTY	備注 Remarks
6220354000	給油蟲手	Oil Nozzle for Worm Gear	1					
6120353900	墊片	Thrust Washer	1					
EP1079-0C	套管	Bushing	1					
EP1135-0A	線掛	Looper Thread Eyelet	1					
EP4265-0A	鉤線桿座	Looper Holder	1					
EP4268-0B	滑塊	Slider	1					
EP4269-0B	導座	Looper Bar Guide	1					
EP4270-0B	導引軸	Looper Bar Guide Shaft	1					
EP4271-0B	套管	Looper Bar Bushing	1					
EP4272-0B	導引棒	Looper Bar	1					
EP4272-3A	塞子	Seal Plug	1					
EP4273-0A	滑塊固定座	Slider Holder	1					
EP4273-0B	滑塊固定座	Slider Holder	1					
EP4276-0A	墊圈	Spacer (Fiber)	2					
EP4276-0B	墊圈	Spacer (Fiber)	1					
EP4278-0A	墊片	Thrust Washer	2					
EP4481-0A	接頭	Oil Tube Joint, One Way	1					
WA050008	平墊圈	Washer	1					
RA200130	扣環	Ring	1					
XP400070	油管	Oil Tube	1					
ZMB03503	螺絲	Screw (M3.5-0.6×12)	2					
ZMB03504	螺絲	Screw (M3.5-0.6×6)	1					
ZMB03505	螺絲	Screw (M3.5-0.6×10)	1					
ZMB05009	螺絲	Screw (M5-0.8×35)	1					
ZMH04005	螺絲	Screw (M4-0.7×6)	1					
ZMH06003	螺絲	Screw (M6-1×8)	2					
ZMQ03007	螺絲	Screw (M3-0.5×3)	1					

13. SST-C007D 勾針驅動機構(2) LOOPER DRIVING MECHANISM(2)

零件號碼 Parts No.	零件名稱	Name of Parts	件數 QTY	零件號碼 Parts No.	零件名稱	Name of Parts	件數 QTY	備注 Remarks
BNKT263013	滾針軸承	Roller Bearing	1					
EP4279-0A	調節銷	Looper Rocker Adjusting Pin	1					
EP4281-0A	撥油器	Oil Splasher	1					
EP4282-0A	導引叉	Guide Fork	1					
EP4283-0A	塞子	Seal Plug	2					
EP4284-0A	連桿組	Looper Connecting Rod, Complete Set	1					
EP4284-1A	連桿	Looper Connecting Rod	1					
EP4285-0A	軸	Looper Shaft	1					
EP4286-0A	止推軸承座圈	Thrust Washer	3					
EP4287-0A	止推軸承	Thrust Roller Bearing	2					
EP4289-0A	塞子	Seal Plug	1					
EP4290-0A	驅動腕	Looper Driving Lever	1					
EP4291-0A	搖臂	Looper Rocker Arm	1					
EP4293-0A	前後偏心	Looper Rocker Regulating Eccentric	1					
EP4294-5Z	偏心連桿組	Looper Rocker Connecting Rod,	1					
EP4294-0A	連桿	Looper Rocker Connecting Rod	1					
EP4401-0B	曲柄軸	Looper Connecting Rod, Complete Set	1					
EP4401-0Z	曲柄軸組	Looper Connecting Rod, Complete Set	1					
WA040010	平墊圈	Washer	2					
WA050008	平墊圈	Washer	1					
XA300200	油棉	Oil Wick	1					
YD015004	彈簧銷	Roll Pin	1					
ZMH05001	螺絲	Screw (M5-0.8×5)	1					
ZMJ06009	螺絲	Screw (M6-1×18)	1					
ZMJ06014	螺絲	Screw (M6-1×9.5)	2					
ZML05002	螺帽	Nut (M5-0.8)	1					
ZSC11002	螺絲	Screw (11/64-40×8.3)	2					
ZSJ11002	螺絲	Screw (11/64-40×8.5)	4					

14. SST-C007D 送料控制機構 FEED DRIVING CONTROL MECHANISM

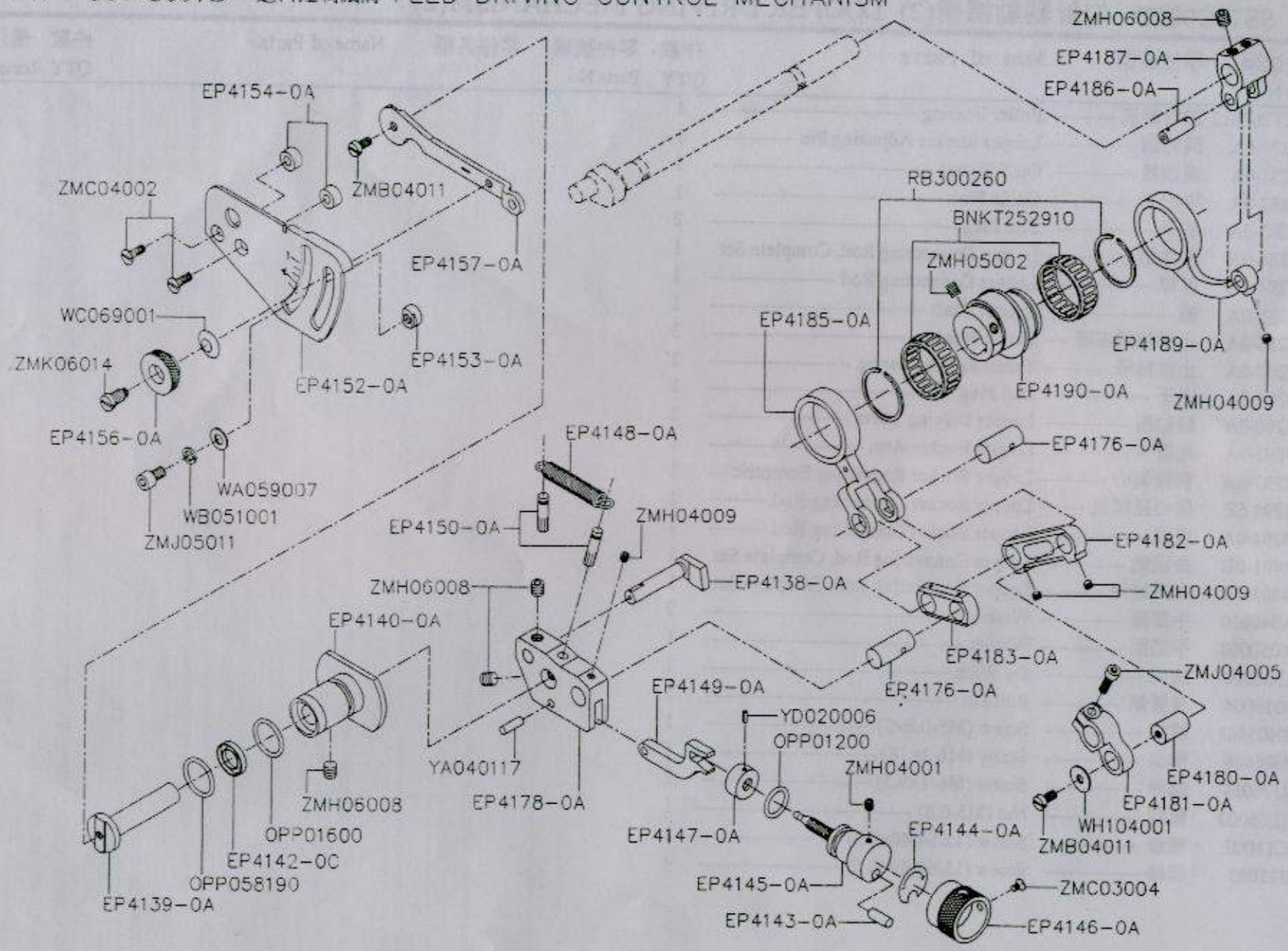

14. SST-C007D 送料控制機構 FEED DRIVING CONTROL MECHANISM

零件號碼 Parts No.	零件名稱	Name of Parts	件數 QTY
BNKT252910	滾針軸承	Roller Bearing	2
EP4138-0A	導引具	Connecting Rod Guide	1
EP4139-0A	調節臂軸	Control Lever Shaft	1
EP4140-0A	調節臂軸套管	Control Lever Shaft Bushing	1
EP4142-0C	油封	Oil Seal	1
EP4143-0A	銷	Adjusting Stop Pin	1
EP4144-0A	貼紙	Sticker	1
EP4145-0A	調整螺絲	Adjusting Screw	1
EP4146-0A	旋鈕	Adjusting Knob	1
EP4147-0A	調整螺帽	Control Nut	1
EP4148-0A	彈簧	Control Bracket Spring	1
EP4149-0A	連接桿	Control Link	1
EP4150-0A	銷	Pin	2
EP4152-0A	刻度板	Differential Feed Graduation	1
EP4153-0A	螺帽	Control Lever Stop	1
EP4154-0A	墊環	Spacer	2
EP4156-0A	旋鈕	Nut	1
EP4157-0A	調節臂	Differential Feed Control Lever	1
EP4176-0A	銷	Connecting Rod Pin	2
EP4178-0A	調節座	Control Bracket	1
EP4180-0A	銷	Lever Link Pin	1
EP4181-0A	送料軸臂	Differential Feed Shaft Lever	1
EP4182-0A	連桿	Lever Link (Long)	1
EP4183-0A	連桿	Lever Link (Short)	1
EP4185-0A	連桿	Differential Feed Connecting Rod	1
EP4186-0A	銷	Connecting Rod Pin	1
EP4187-0A	送料軸腕	Feed Lift Lever	1
EP4189-0A	連桿	Feed Lift Connecting Rod	1
EP4190-0A	送料偏心	Differential Feed Eccentric	1
OPP01200	O型環	O-ring(P12)	1
OPP01600	O型環	O-ring(P16)	1
OPP058190	O型環	O-ring	1
RB300260	C型扣環	Retaining Ring	2
WA059007	平墊圈	Washer	1
WB051001	彈簧墊圈	Spring Washer	1
WC069001	盤形彈簧墊圈	Conical Spring Washer	1

零件號碼 Parts No.	零件名稱	Name of Parts	件數 QTY	備注 Remarks
WH104001	平墊圈	Washer	1	
YA040117	銷	Control Link Pin	1	
YD020006	彈簧銷	Roll Pin	1	
ZMB04011	螺絲	Screw (M4-0.7×8)	2	
ZMC03004	螺絲	Screw (M3-0.5×4)	1	
ZMC04002	螺絲	Screw (M4-0.7×11)	2	
ZMH04001	螺絲	Screw (M4-0.7×4)	1	
ZMH04009	螺絲	Screw (M4-0.7×2)	4	
ZMH05002	螺絲	Screw (M5-0.8×6)	2	
ZMH06008	螺絲	Screw (M6-1×6)	5	
ZMJ04005	螺絲	Screw (M4-0.7×12)	1	
ZMJ05011	螺絲	Screw (M5-0.8×8)	1	
ZMK06014	螺絲	Screw (M6-1×7.5)	1	

15. SST-C007D 針擋與送料機構 NEEDLE GUARD & FEED DRIVING MECHANISM

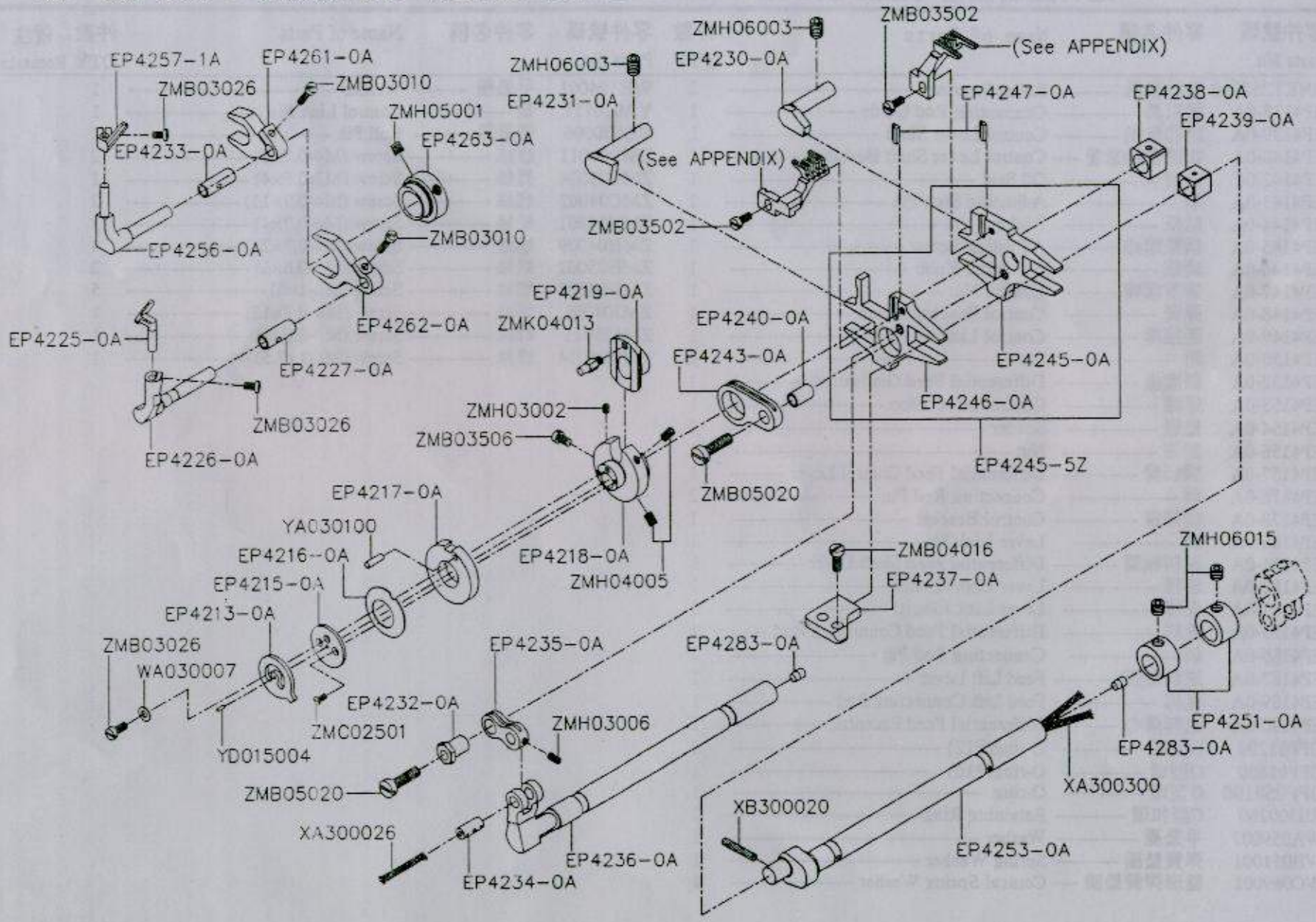

15. SST-C007D 針擋與送料機構 NEEL GUARD & FEED DRIVING MECHANISM

零件號碼 Parts No.	零件名稱	Name of Parts	件數 QTY
EP4213-0A	調節定位器	Feed Regulating Stop	1
EP4215-0A	押片	Conical Spring Presser	1
EP4216-0A	盤形彈簧墊圈	Conical Spring	1
EP4217-0A	偏心凸輪	Eccentric Cam	1
EP4218-0A	送料偏心	Feed Eccentric	1
EP4219-0A	滑塊	Feed Adjusting Slide	1
EP4225-0A	針受器(前)	Needle Guard (Front)	1
EP4226-0A	針當臺	Needle Guard Holder (Front)	1
EP4227-0A	套管	Driving Connection Bushing	1
EP4230-0A	導片	Feed Bar Guide (Upper/Right)	1
EP4231-0A	導片	Feed Bar Guide (Upper/Left)	1
EP4232-0A	偏心銷	Oscillation Adjusting Eccentric	1
EP4233-0A	套管	Driving Connection Bushing	1
EP4234-0A	銷	Driving Connection Pin	1
EP4235-0A	連桿	Differential Feed Bar Driving	1
EP4236-0A	前送料軸	Differential Feed Shaft	1
EP4237-0A	導板	Feed Bar Guide (Lower)	1
EP4238-0A	角驅	Feed Lift Block (Rear)	1
EP4239-0A	角驅	Feed Lift Block (Front)	1
EP4240-0A	套管	Driving Connection Bushing	1
EP4243-0A	連桿	Main Feed Bar Driving Connection	1
EP4245-5Z	送料機構	Feed Mechanism, Complete Set	1
EP4245-0A	后送料臺	Main Feed Bar	1
EP4246-0A	前送料臺	Differential Feed Bar	1
EP4247-0A	鍵	Feed dog Key	2
EP4251-0A	套環	Collar	2
EP4253-0A	送料上下軸	Feed Lift Shaft	1
EP4256-0A	針當臺	Needle Guard Holder (Rear)	1
EP4257-1A	針受器(后)	Needle Guard (Rear)	1
EP4261-0A	針受腕	Needle Guard Lever (Rear)	1
EP4262-0A	針受腕	Needle Guard Lever (Front)	1

零件號碼 Parts No.	零件名稱	Name of Parts	件數 QTY	備注 Remarks
EP4263-0A	偏心環	Needle Guard Eccentric (Front)	1	
EP4283-0A	塞子	Seal Plug	2	
WA030007	平墊圈	Washer	1	
XA300026	油棉	Oil Wick	1	
XA300300	油棉	Oil Wick	1	
XB300020	油棉	Oil Wick	1	
YA030100	銷	Stop Pin	1	
YD015004	彈簧銷	Roll Pin	1	
ZMB03010	螺絲	Screw (M3-0.5×10)	2	
ZMB03026	螺絲	Screw (M3-0.5×8)	3	
ZMB03502	螺絲	Screw (M3.5-0.6×8)	2	
ZMB03506	螺絲	Screw (M3.5-0.6×6)	1	
ZMB04016	螺絲	Screw (M4-0.7×10)	2	
ZMB05020	螺絲	Screw (M5-0.8×18)	2	
ZMC02501	螺絲	Screw (M2.5-0.45×4)	2	
ZMH03002	螺絲	Screw (M3-0.5×4)	1	
ZMH03006	螺絲	Screw (M3-0.5×6)	1	
ZMH04005	螺絲	Screw (M4-0.7×6)	2	
ZMH05001	螺絲	Screw (M5-0.8×5)	2	
ZMH06003	螺絲	Screw (M6-1×6)	2	
ZMH06015	螺絲	Screw (M6-1×4.8)	2	
ZMK04013	螺絲	Screw	1	

16 SST-C007D 润滑系统(1) LUBRICATING SYSTEM(1)

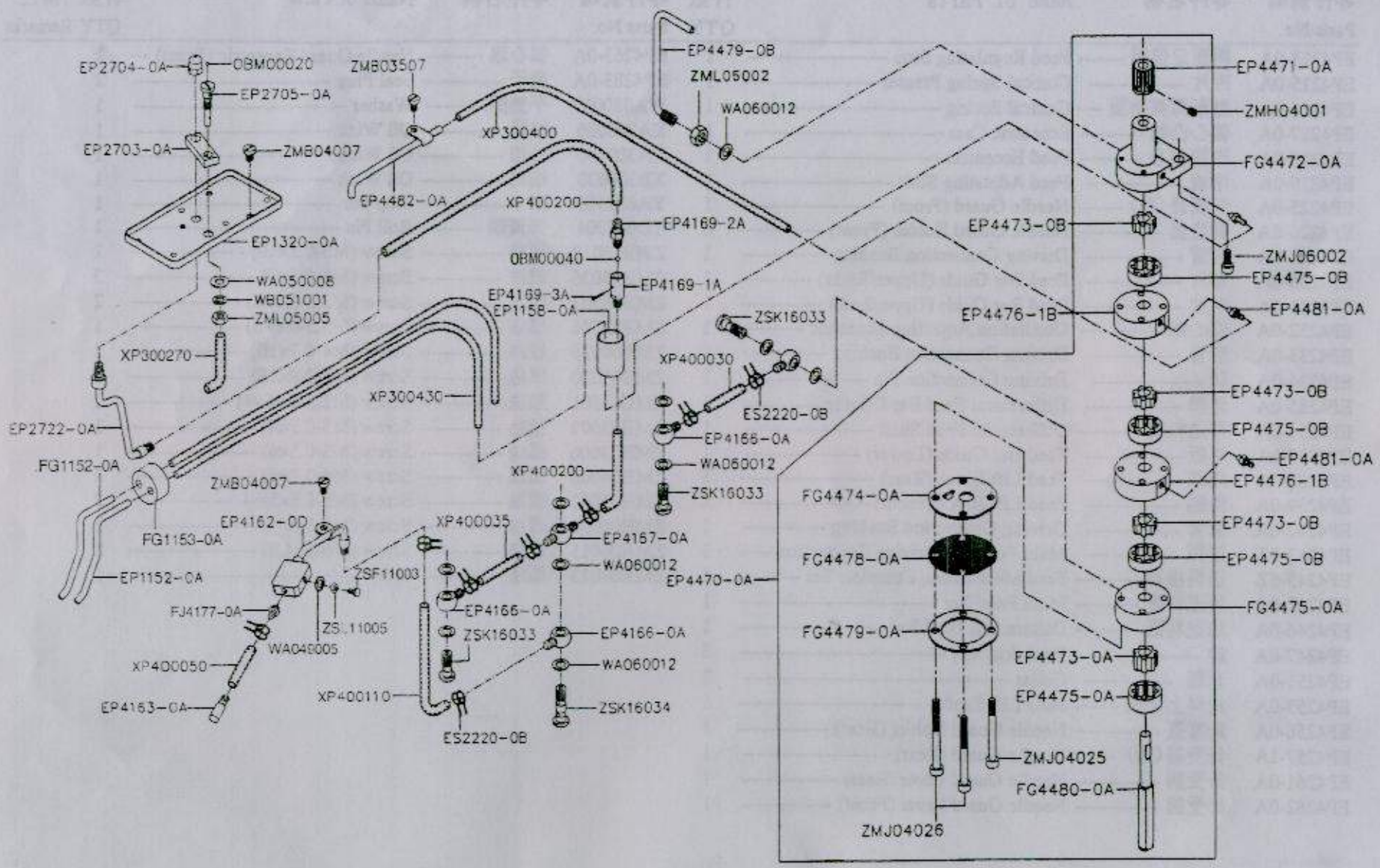

16. SST-C007D 潤滑系統(1) LUBRICATING SYSTEM(1)

零件號碼 Parts No.	零件名稱	Name of Parts	件數 QTY	零件號碼 Parts No.	零件名稱	Name of Parts	件數 QTY	備注 Remarks
EP1152-0A	油管	Suction Pipe	1	OBM00020	鋼珠	Seal Plug	1	
FG1153-0A	塞子	Suction Pipe Bushing	1	OBM00040	鋼珠	Seal Plug	1	
EP1158-0A	排油管	Draining Pipe	1	WA049005	平墊圈	Washer	1	
EP1320-0A	油盤	Oil Receiver	1	WA050008	平墊圈	Washer	1	
EP2703-0A	給油塊	Lubricant Guiding Block	1	WA060012	墊圈	Seal	10	
EP2704-0A	噴油嘴	Top Nozzle Cap	1	WB051001	彈簧墊圈	Spring Washer	1	
EP2705-0A	油量調節軸	Oil Adjusting Screw	1	XP300270	油管	Oil Tube (3×5×270mm)	1	
EP2722-0A	噴油管組	Oil Sight Top Nozzle	1	XP300400	油管	Oil Tube (3×5×400mm)	1	
EP4162-0A	油管組	Lower Shaft Oiling Shower	1	XP300430	油管	Oil Tube (3×5×430mm)	2	
EP4163-0A	接頭	Lower Shaft Oiling Outlet	1	XP400030	油管	Oil Tube (4×6×30mm)	1	
EP4166-0A	接頭	Oil Tube Joint, One Way	4	XP400035	油管	Oil Tube (4×6×35mm)	1	
EP4167-0A	接頭	Oil Tube Joint, Two Way	1	XP400050	油管	Oil Tube (4×6×36mm)	1	
EP4169-1A	逆止閥	Non-Return Valve Unit	1	XP400110	油管	Oil Tube (4×6×100mm)	1	
EP4169-2A	接頭	Oil Tube Joint, Two Way	1	XP400200	油管	Oil Tube (4×6×170mm)	1	
EP4169-3A	銷	Connecting Rod Pin	1	XP400200	油管	Oil Tube (4×6×200mm)	1	
EP4470-0A	齒輪邦浦組	Oil Pump, Complete Set	1	ZMB03507	螺絲	Screw (M3.5-0.6X4.5)	1	
EP4471-0A	齒輪	Oil Pump Driving Worm Gear	1	ZMB04007	螺絲	Screw (M4-0.7×5)	4	
FG4472-0A	邦浦本體	Pump Housing	1	ZMH04001	螺絲	Screw (M4-0.7×4)	2	
EP4473-0A	內轉子	Inner Gear	1	ZMJ04009	螺絲	Screw (M4-0.7×40)	4	
EP4473-0B	內轉子	Inner Gear	3	ZML05005	螺帽	Nut	1	
FG4480-0A	軸	Shaft	1	ZSF11003	螺絲	Screw (11/64-40 x 16.5)	1	
EP4475-0A	外轉子	Ring Gear	1	ZSL11005	螺帽	Nut	1	
EP4475-0B	外轉子	Ring Gear	3	ZSK16033	螺絲	Fitting Stud (Short)	3	
FG4475-0A	泵浦底座	Pump Base	1	ZSK16034	螺絲	Fitting Stud (Long)	1	
EP4476-1B	泵浦中座	Pump Base	2	ZML05002	螺帽	Nut	1	
FG4474-0A	泵浦底座蓋	Pump Base Cover	1					
EP4479-0B	噴油嘴	Oil Nozzle for Worm Gear	1					
EP4481-0A	接頭	Oil Tube Joint, One Way	3					
EP4482-0A	回油管	Suction Pipe	1					
ES2220-0B	管夾	Oil Tube Clamp	8					
FG1152-0A	油管	Suction Pipe	1					
FG4478-0A	濾網	Oil Filer	1					
FG4479-0A	濾網環	Filer Plate	1					
FJ4177-0A	接頭	Oil Tube Joint	1					

17. SST-C007D 潤滑系統(2) LUBRICATING SYSTEM(2)

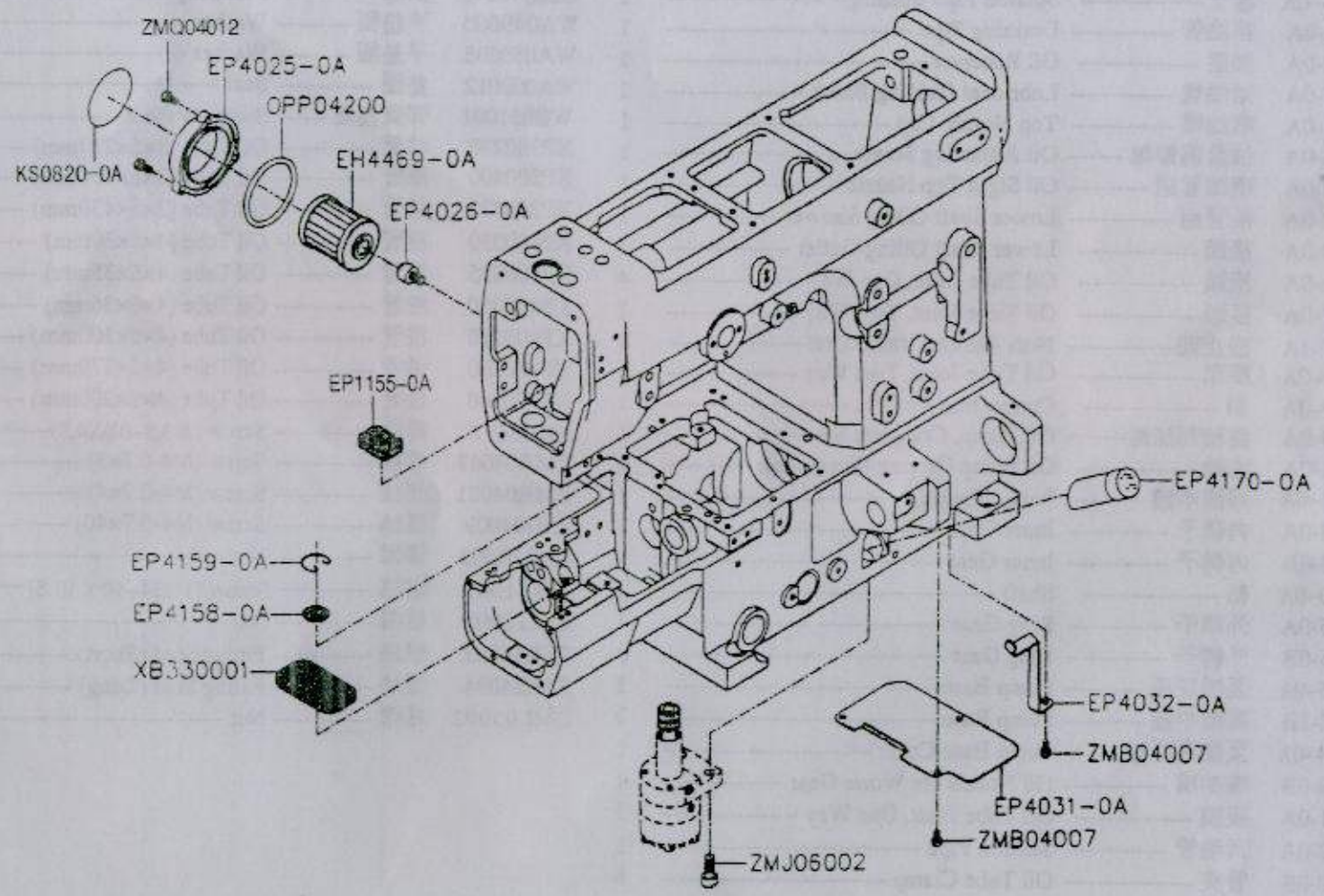

17. SST-C007D 潤滑系統(2) LUBRICATING SYSTEM(2)

零件號碼 Parts No.	零件名稱	Name of Parts	件數 QTY	零件號碼 Parts No.	零件名稱	Name of Parts	件數 QTY	備注 Remarks
EH4469-0A	油過濾器	Oil Filter	1					
EP4025-0A	濾網蓋	Oil Filter Cap	1					
EP4026-0A	接頭	Oil Filter Connector	1					
EP4031-0A	防塵板	Dust Proof Plate	1					
EP4032-0A	油管支架	Oil Tube Stay	1					
EP4158-0A	濾網片	Oil Filter Screen	1					
EP4159-0A	彈簧圈	Oil Filter Screen Clamp	1					
EP4170-0A	油位計	Oil Lever Gauge	1					
OPP04200	O型環	O-ring(P42)	1					
XB330001	油棉	Felt	1					
EP1155-0A	油棉	Felt	1					
ZMB04007	螺絲	Screw (M4-0.7×5)	4					
ZMQ04012	螺絲	Screw (M4-0.7×12)	3					
ZMJ06002	螺絲	Screw (M6-1×15)	2					
	標貼	Paster	1					

18 SST-C007D 附件 ACCESSORIES

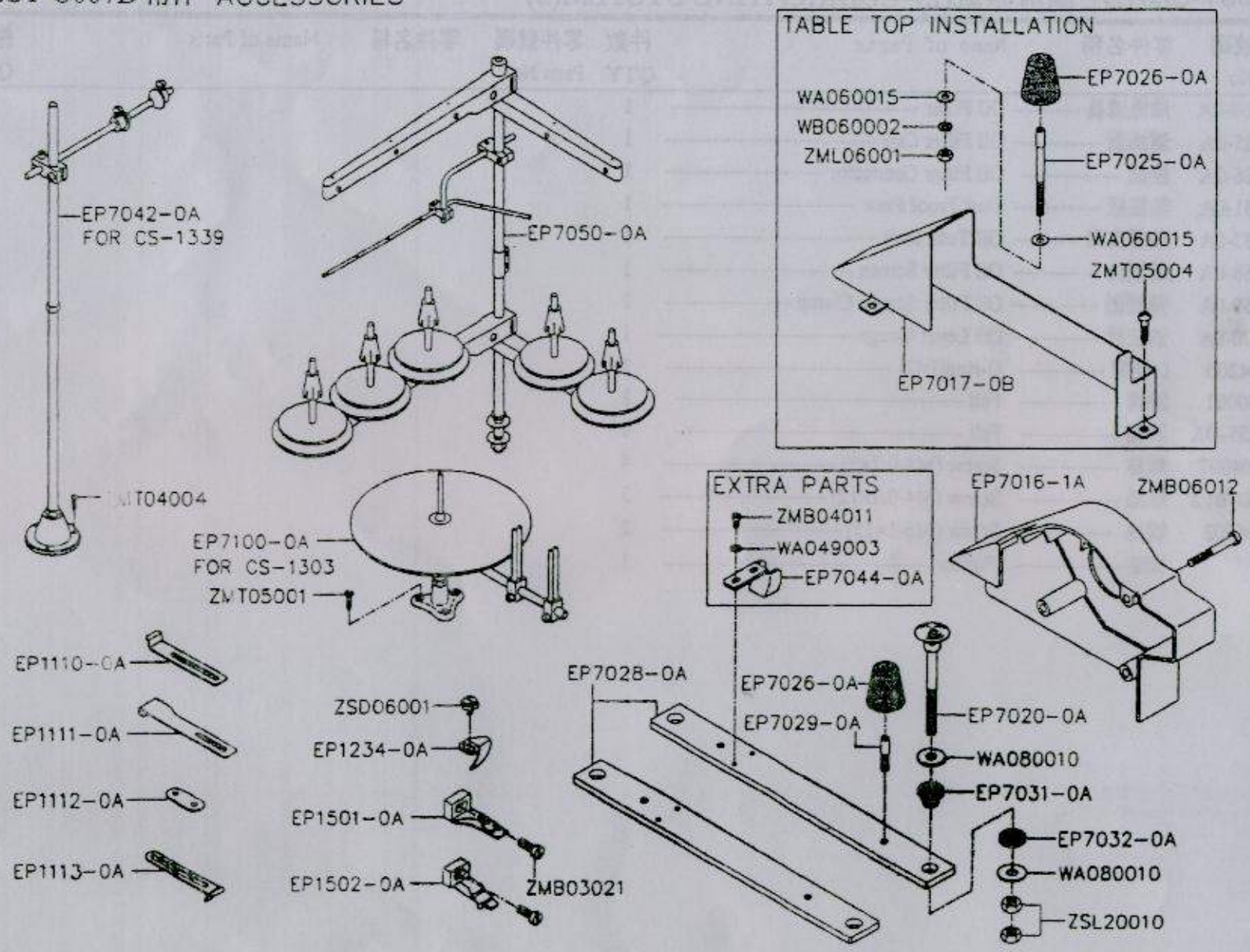

18. SST-C007D 附件 ACCESSORIES

零件號碼 Parts No.	零件名稱	Name of Parts	件數 Q'TY	零件號碼 Parts No.	零件名稱	Name of Parts	件數 QTY	備注 Remarks
EP1110-0A	擋布板	Cloth Baffle	1	ZMT05004	木螺釘	Wood Screw	3	
EP1111-0A	下擺用擋板	Lap Baffle	1	ZSD06001	螺丝	Screw	1	
EP1112-0A	墊片	Washer	1	ZSL20010	螺帽	Nut (UNC5/16-18)	8	
EP1113-0A	定位片	Localizer Plate	1					
EP1234-0A	押片	Presser Plate	1					
EP1501-0A	左擋塊	Baffle Left	1					
EP1502-0A	右擋塊	Baffle Right	1					
EP7016-1A	皮帶輪蓋	Belt Cover	1					
EP7017-0B	皮帶輪保護蓋	Belt Cover (Lower)	1					
EP7020-0A	車板螺絲	Hanging Bolt (UNC5/16-18)	4					
EP7025-0A	固定螺栓	Setting Screw	4					
EP7026-0A	緩衝墊	Oil Reservoir Rubber Cushion	4					
EP7028-0A	支撐桿	Supporting Board	2					
EP7029-0A	螺絲	Setting Screw (M6-1×16)	4					
EP7031-0A	墊圈座	Supporting Board Rubber Cushion	4					
EP7032-0A	墊圈	Supporting Board Rubber Cushion	4					
EP7042-0A	鬆緊帶支架組	Elastic Tap Stand, Complete Set	1					
EP7044-0A	導鏈板	Chain Guide	1					
EP7050-0A	線架組	Thread Stand, Complete Set	1					
EP7100-0A	織帶支架組	Knitted Tap Stand, Complete Set	1					
WA049003	平墊圈	Washer	2					
WA060015	平墊圈	Washer	8					
WA080010	平墊圈	Washer	8					
WB060002	彈簧墊圈	Spring Washer	4					
ZMB03021	螺丝	Screw	2					
ZMB04011	螺絲	Screw (M4-0.7×8)	2					
ZMB06012	螺絲	Screw (M6-1×46)	3					
ZML06001	螺帽	Nut (M6-1)	4					
ZMT04004	木螺釘	Wood Screw	3					
ZMT05001	木螺釘	Wood Screw	3					

18. SST-C007D 附件 ACCESSORIES

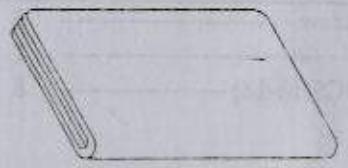
A7001-0A

A7010-0A

A7010-1A

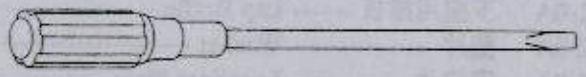
A7010-2A

A7012-1A

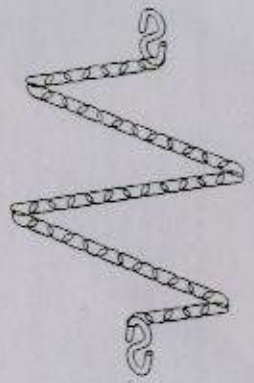
B7060-0A

EH7012-0A

EP7086-0A

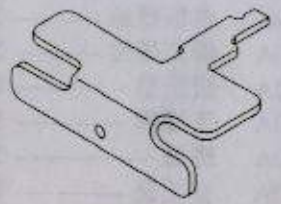
EP7047-0A
(OPTIONAL)

G7014-0A

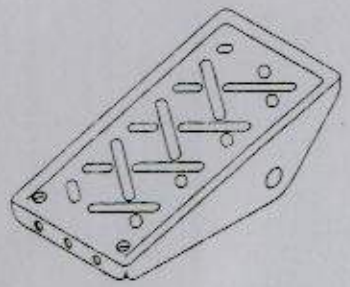
L7070-0A

TLA015

TLA025

TLA030

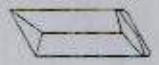
INUY128GAS

TRB06X07

TRB08X10

18. SST-C007D 附件 ACCESSORIES

零件號碼 Parts No.	零件名稱	Name of Parts	件數 QTY	零件號碼 Parts No.	零件名稱	Name of Parts	件數 QTY	備注 Remarks
A7001-0A	防塵罩	Vinyl Cover	1					
A7010-0A	螺絲起子(小)	Screw Driver (Small)	1					
A7010-1A	螺絲起子(中)	Screw Driver (Medium)	1					
A7010-2A	螺絲起子(大)	Screw Driver (Large)	1					
A7012-1A	油壺(中)	Oiler	1					
B7060-0A	鏈子	Chain Assembly	1					
EH7012-0A	油壺(1L)	Oil Bottle (1L)	1					
EP7047-0A	校正模板	Timing Gauge (Optional)	1					
EP7086-0A	矽膠油	Silicone Oil	1					
G7014-0A	鑷子	Tweezers	1					
INUY128GA	車針	Needles	6					
L7070-0A	腳踏板	Pedal Assembly	1					
TLA015	L型六角扳手	Hexagonal Wrench 1.5mm	1					
TLA025	L型六角扳手	Hexagonal Wrench 2.5mm	1					
TLA030	L型六角扳手	Hexagonal Wrench 3mm	1					
TRB06X07	雙頭開口扳手	Open-end Wrench 6×7	1					
TRB08X10	雙頭開口扳手	Open-end Wrench 8×10	1					

SST-C007D 零件號碼與頁數對照 Numerical Parts-List

零件號碼 PARTS NO.	頁數 PARTS	零件號碼 PARTS NO.	頁數 PARTS	零件號碼 PARTS NO.	頁數 PARTS	零件號碼 PARTS NO.	頁數 PARTS	零件號碼 PARTS NO.	頁數 PARTS
6220354000	24	EP1094-0A	18	EP1063-0A	6	EP1135-0A	24	EP1265-0A	22
A7001-0A	38	EP1073-0A	6	EP1064-0A	6	EP1152-0A	32	FG1267-0A	22
A7010-0A	38	EP1027-0A	6	EP1067-0A	6	FG1153–0A	32	EP1268-0A	22
A7010-1A	38	EP1024-0A	6	EP1068-0A	16	EP1158-0A	32	FG1269–0A	8
A7010-2A	38	EP1024-1A	6	EP1069-0A	16	FG1178–0A	8	EP4169-2A	32
A7012-1A	38	EP1025-0A	6	FG1070–0A	18	WARW000108-A	4	EP1271-0A	14
B7060-0A	38	EP1026-0B	6	EP1072-0A	16	FG1180–0A	20	EP1273-0A	10,14
BB6002VVNR	12	EP1029-0B	6	EP2405–0A	18	EP1182-0B	20	EP1275-0A	16
BB6202VV	14	EP1031-0B	6	EP1076-0A	18	EP1183-0A	20	EP1276-0A	16
BB6204VVC	10,14	EP1032-0A	6	EP1077-0B	2,4	EP1184-0A	20	EP1278-0A	16
BB6205ZZNRN	10	EP1033-0A	20	EP2251–0A	8	EP1186-0A	20	EP1279-0A	16
BN081113	18	EP1035-0A	6,12	EP1079-0A	8	EP1187-0A	20	EP1279-1A	16
BNKT222613	22	EP1036-0A	6,12	EP4012-0B	4	EP1189-0A	20	EP1281-0A	8
BNKT252910	28	EP1037-0C	6	EP1082-0A	20	EP1191-0A	20	EP1282-0A	8
BNKT263013	26	EP1037-0B	12	EP1083-0A	18	EP1192-0A	12	EP2483–0A	20
EH1042-0B	6	EP1038-0A	6	EP1084-0B	8	EP1193-0A	20	EP1300-10	2
EH4469-0A	34	EP1039-1A	6	EP1085-0A	8	EP1202-0A	20	EP1301-0A	8
EH7012-0A	38	EP1041-0A	6	EP1086-0A	8	EP1203-0A	20	EP2484–0A	20
FG1009-0A	2	EP1042-0A	6	EP1087-0B	8	EP1234-0A	36	EP1312-0A	20
FG1010-0A	2	EP1043-0A	6	EP1092-0A	22	EP1253-0A	22	EP1314-0A	20
EP1011-0A	4	EP1045-0A	6	EP1100-0Z	16	EP1254-0A	8	EP1315-0A	20
EP1012-0A	4	EP1047-0A	6	EP1100-1A	14	EP1255-0A	8	EP1316-0A	20
EP2495-0A	20	EP1051-0A	6	EP1103-0A	14	EP1256-0A	22	EP1318-0A	20
EP1014-0A	2,8	EP1056-0A	6	EP1105-0A	14	EP1257-0A	22	EP1320-0A	32
EP1015-1A	14	EP1056-0B	6	FG1106–0A	18	EP1257-0Z	22	EP1324-0A	20
EP1015-3A	2	EP1057-0A	6	EP1110-0A	36	EP1259-0A	22	EP1325-0A	20
EP1015-6A	2	EP1058-0A	6	EP1111-0A	36	EP1261-0A	22	EP1327-0A	20
EPT-A1300005	2	EP1059-0A	6	EP1112-0A	36	EP1262-0A	22	EP1328-0A	20
EP1017-0B	4	EP1060-0A	6	EP1113-0A	36	EP1263-0A	22	EP1344-0A	12
EP1263-0A	22	EP1062-0A	6	EP1130-0A	18				

SST-C007D 零件號碼與頁數對照 Numerical Parts-List

零件號碼 PARTS NO.	頁數 PARTS	零件號碼 PARTS NO.	頁數 PARTS	零件號碼 PARTS NO.	頁數 PARTS	零件號碼 PARTS NO.	頁數 PARTS	零件號碼 PARTS NO.	頁數 PARTS
FG1345-0A	14	EP4031-0A	34	EP4113-0A	10	EP4178-0A	28	EP4234-0A	30
EP1346-0A	14	EP4032-0A	34	EP4115-0A	10	EP4179-0A	8	EP4235-0A	30
EP1347-0A	10	EP4034-0A	18	EP4119-0A	8	EP4180-0A	28	EP4236-0A	30
EP1348-0A	10	EP4035-0A	18	EP4120-0A	8	EP4181-0A	28	EP4237-0A	30
EP1349-0A	12	EP4036-0A	18	EP4134-0B	10	EP4182-0A	28	EP4238-0A	30
EP1360-1A	2	EP4037-0C	18	EP4138-0A	28	EP4183-0A	28	EP4239-0A	30
EP1362-0A	2	EP4038-0A	18	EP4139-0A	28	EP4185-0A	28	EP4240-0A	30
EP1364-1A	4	FG4039-0A	2	EP4140-0A	28	EP4186-0A	28	EP4243-0A	30
EP1367-0B	4	EP4051-0C	2	EP4142-0C	28	EP4187-0A	28	EP4245-5Z	30
EP1501-0A	36	EP4054-0A	2	EP4143-0A	28	EP4189-0A	28	EP4245-0A	30
EP1502-0A	36	EP4058-0A	2,4	EP4144-0A	28	EP4190-0A	28	EP4246-0A	30
EP2420-0A	18	EP4059-0A	18	EP4145-0A	28	EP4203-0B	4	EP4247-0A	30
FG2420-5Z	18	EP4061-0C	2	EP4146-0A	28	EP4206-0B	4	EP4251-0A	30
6120353900	24	EP4063-0B	2	EP4147-0A	28	EP4208-0A	4	EP4253-0A	30
FG2424-0A	18	EP4065-0A	2	EP4148-0A	28	EP4210-0A	2	EP4254-0A	8
EP2427-1A	18	EP4067-0A	2	EP4149-0A	28	EP4213-0A	30	EP4255-0A	8
EP1364-1A	2	EP4068-0C	2	EP4150-0A	28	EP4215-0A	30	EP4256-0A	30
EP1150-0A	18	EP4080-1B	4	EP4152-0A	28	EP4216-0A	30	EP4257-1A	30
EP2703-0A	32	EP4081-0A	4	EP4153-0A	28	EP4217-0A	30	EP4261-0A	30
EP2704-0A	32	EP4082-0A	4	EP4154-0A	28	EP4218-0A	30	EP4262-0A	30
EP2705-0A	32	EP4083-0B	4	EP4156-0A	28	EP4219-0A	30	EP4263-0A	30
EP2722-0A	32	EP4085-0A	4	EP4157-0A	28	EP4225-0A	30	EP4265-0A	24
EP4169-0B	32	EP4086-0A	4	EP4158-0A	34	EP4226-0A	30	EP4268-0B	24
EP4401-0B	26	EP4087-0A	4	EP4159-0A	34	EP4227-0A	30	EP4269-0B	24
EP4021-3A	4	EP4089-0A	4	EP4162-0D	32	EP4228-0A	8	EP4270-0B	24
EP4013-0B	4	EP4091-0A	2	EP4163-0A	32	EP4229-0A	8	EP4271-0B	24
EP4016-0B	4	EP4093-0A	4	EP4166-0A	32	EP4230-0A	30	EP4272-0B	24
EP4022-0A	4	EP4100-0B	2	EP4167-0A	32	EP4231-0A	30	EP4272-3A	24
EP4025-0A	34	EP4101-0B	2	EP4170-0A	34	EP4232-0A	30	EP4273-0A	24
EP4026-0A	34			EP4176-0A	28	EP4233-0A	30	EP4273-0B	24

SST-C007D1 零件號碼與頁數對照 Numerical Parts-List

零件號碼 PARTS NO.	頁數 PARTS	零件號碼 PARTS NO.	頁數 PARTS	零件號碼 PARTS NO.	頁數 PARTS	零件號碼 PARTS NO.	頁數 PARTS	零件號碼 PARTS NO.	頁數 PARTS
EP4274-0B	4	EP4475-0A	32	EP7044-0A	36	TLA030	38	XA300025	18
EP4276-0B	24	FC4475-0A	32	EP7047-0A	38	TRB06X07	38	XA300026	30
EP4278-0A	24	EP4476-0B	32	EP7050-0A	36	TRB08X10	38	XA300160	18
EP4279-0A	26	EP4476-1B	32	EP7086-0A	38	WA030006	6	XA300180	14
EP4281-0A	26	FC4474-0A	32	EP7100-0A	36	WA030007	30	XA300200	10,26
EP4282-0A	26	EP4479-0B	32	EZ1361-0A	2	WA039001	12	XA300300	30
EP4283-0A	26,30	EP4481-0A	24,32	ES0502-0A	6	WA040010	26	XB123001	6
EP4284-0A	26	EP4482-0A	32	ES0504-0A	6	WA049003	36	XB200005	10
EP4284-1A	26	EP5314-0B	12	ES0510-0A	6	WA049006	4,6	XB300020	30
EP4285-0A	26	EP5342-0A	12	ES1008-0A	6	WA050008	24,26,32	XB310005	6
EP4286-0A	26	EP5344-0A	12	ES2220-0B	32	WA059001	4	XB330001	34
EP4287-0A	26	EP5345-0A	12	ES3010-0A	6	WA059005	8	XB400026	18
EP4289-0A	10,26	EP5346-0A	12	G7014-0A	38	WA059007	28	EP1155-0A	34
EP4290-0A	26	EP5347-0A	12	INUY128GAS	18,38	WA060012	32	XC200060	6
EP4291-0A	26	EP5369-0A	14	KH0518-0A	6	WA060015	36	XP300400	32
EP4293-0A	26	EP6050-356B	4	L7070-0A	38	WA069010	22	XP300430	32
EP4294-5Z	26	EP5565-0A	12	LN2251-0A	8	WARW000310-A	2	XP400030	32
EP4294-0A	26	EP6101-0A	22	OBM00020	32	WA080010	36	XP400035	32
EP4296-0A	8	EP7016-1A	36	OBM00030	18	WB051001	16,28,32	XP400050	32
EP4297-0A	8	EP7017-0B	36	OPG04000	10	WB060002	36	XP400045	18
EP4401-0B	10	EP7018-0A	12	OPP01200	28	WC059001	4	XP400070	24
EP4401-0Z	26	EP7019-0A	12	OPP01600	28	WC060003	8	XP400100	32
EP4402-0A	10	EP7020-0A	36	OPP04200	34	WC069001	28	WA049005	32
EP4404-0A	10	EP7025-0A	36	RB20015B	14	WG000012	12	XP400200	32
EP4470-0A	32	EP7026-0A	36	RB200220	22	WH104001	22	YA030100	30
EP4471-0A	2	EP7028-0A	36	RB300260	28	WH104001	28	EP4017-0A	4
FC4472-0A	32	EP7029-0A	36	RE000030	20	WH205003	16	YA040117	28
EP4473-0A	32	EP7031-0A	36	RE000040	4	WH207008	18	YA040840	2
EP4473-0B	32	EP7032-0A	36	TLA015	38	WH210005	22	YD015004	26,30
FC4480-0A	32	EP7042-0A	36	TLA025	38	WH213002	24	YD020006	6,10,18,28

SST-C007D 零件號碼與頁數對照 Numerical Parts-List

零件號碼 PARTS NO.	頁數 PARTS	零件號碼 PARTS NO.	頁數 PARTS	零件號碼 PARTS NO.	頁數 PARTS	零件號碼 PARTS NO.	頁數 PARTS	零件號碼 PARTS NO.	頁數 PARTS
YD040008	6	ZMC04002	28	ZMJ08007	2	ZSB15006	20	FG4479-0A	32
YD040016	20	ZMC04007	4,6	ZMK04013	30	ZSB24003	2	FJ4177-0A	32
ZMA04005	20	ZMG04023	12	ZMK04014	4	ZSC09028	18	LN2252-0A	8
ZMB03010	30	ZMG04024	4	ZMK06014	28	ZSD06001	36	LN2269-0A	8
ZMB03018	6,20	ZMH03002	2,30	ZML05002	26	ZSD11011	20	LN2270-0A	8
ZMB03020	18,20	ZMH03006	30	ZML05005	32	ZSG08006	6	OAGM101805	8
ZMB03021	36	ZMH04001	4,12,18	ZML06001	22,36	ZSG11060	8	OAGM091504	8
ZMB03026	2,30	ZMH04001	28,32	ZMQ03007	24	ZSG12048	20	OPP00500	16
ZMB03502	16,30	ZMH04005	24,30	ZMQ04006	2,4,8	ZSA09007	22	OPP00600	20
ZMB03503	24	ZMH04009	28	ZMQ05001	4	ZSJ11002	26	OPP02000	2
ZMB03504	24	ZMH05001	22,26,30	ZMQ06001	8	ZSK16033	32	OPP058190	22,28
ZMB03505	24	ZMH05002	28	ZMT04004	36	ZSK16034	32	OPP0430160	10
ZMB03506	30	ZMH06003	10,14,24,30	ZMT05001	36	ZSL11004	8	RA200130	8,24
ZMB03507	2	ZMH06008	4,10,12	ZMT05004	36	ZML05002	32	WD000035	18
ZMB04007	2,4,32,34	ZMH06008	14,22,28	ZSA08009	18	ZSL20010	36	XA200400	18
ZMB04008	14,22	ZMH06011	10,14	ZSA14006	12	ZSN11002	6,12	XB310005	8
ZMB04011	2,4,10	ZMH06015	10,30	ZSB06013	8	EJ1374-0A	18	XP300070	18
ZMB04011	14,18,28,36	ZMH08004	18	ZSB06017	18	EP1055-0B	18	XP300270	32
ZMB04016	18,30	ZMJ04002	4	ZSB08038	16	EP1075-356A	18	YA040017	8
ZMJ04022	4	ZMJ04005	28	ZSB08042	12	EP1061-0B	6	ZMB03507	32
ZMB04038	4	ZMJ04009	32	ZSB09003	20	EP1061-1B	6	ZMB03507	32
ZMB04046	20	ZMJ04032	18	ZSB09010	4	EP1061-2B	6	ZMJ04014	8
ZMB05009	24	ZMJ05015	16	ZSB09011	12,20	EP1079-1C	8,24	ZMJ04025	32
ZMB05020	30	ZMJ05003	20	ZSB09017	6	EP1102-0A	14	ZMJ04026	32
ZMB06012	36	ZMJ05008	18,16	ZSB09051	16	ET0224-0A	2	ZSA08009	6
ZMB04006	2	ZMJ05011	28	ZSB11002	16	FG1152-0A	32	ZSB09011	18
ZMC02501	30	ZMQ04012	2,4,22,34	ZSB11010	20	FG2250-0A	8	ZSF11003	32
ZMC03004	4,6,28	ZMJ06002	16,22,34	ZSB11015	20	FG2252-0A	8	ZSL11005	32
ZMC03007	4	ZMJ06009	26	ZSC11002	26	FG2269-0A	8	ZSH11005	32
OBM00040	32	ZMJ06014	26	ZSB11011	12	FG4478-0A	32	KS0820-0A	34
		ZMJ05016	2	ZSB11094	20,22	OAGM071503	8		

MODEL: SST-C007D/P2

索　引	INDEX	PAGE
1 卷邊附左切刀機構(一)	LEFT HAND KNIFE FOR HEMMING MECHANISM(1)	2-5
2 卷邊附左切刀機構(二)	LEFT HAND KNIFE FOR HEMMING MECHANISM(2)	6-7
3 零件號碼與頁數對照表	NUMERICAL PARTS-LIST	8
4 附録	APPENDIX	9

SST-C007D 捲縫付左切刀機構(1) LEFT HAND KNIFE FOR HEMMING MECHANISM(1)

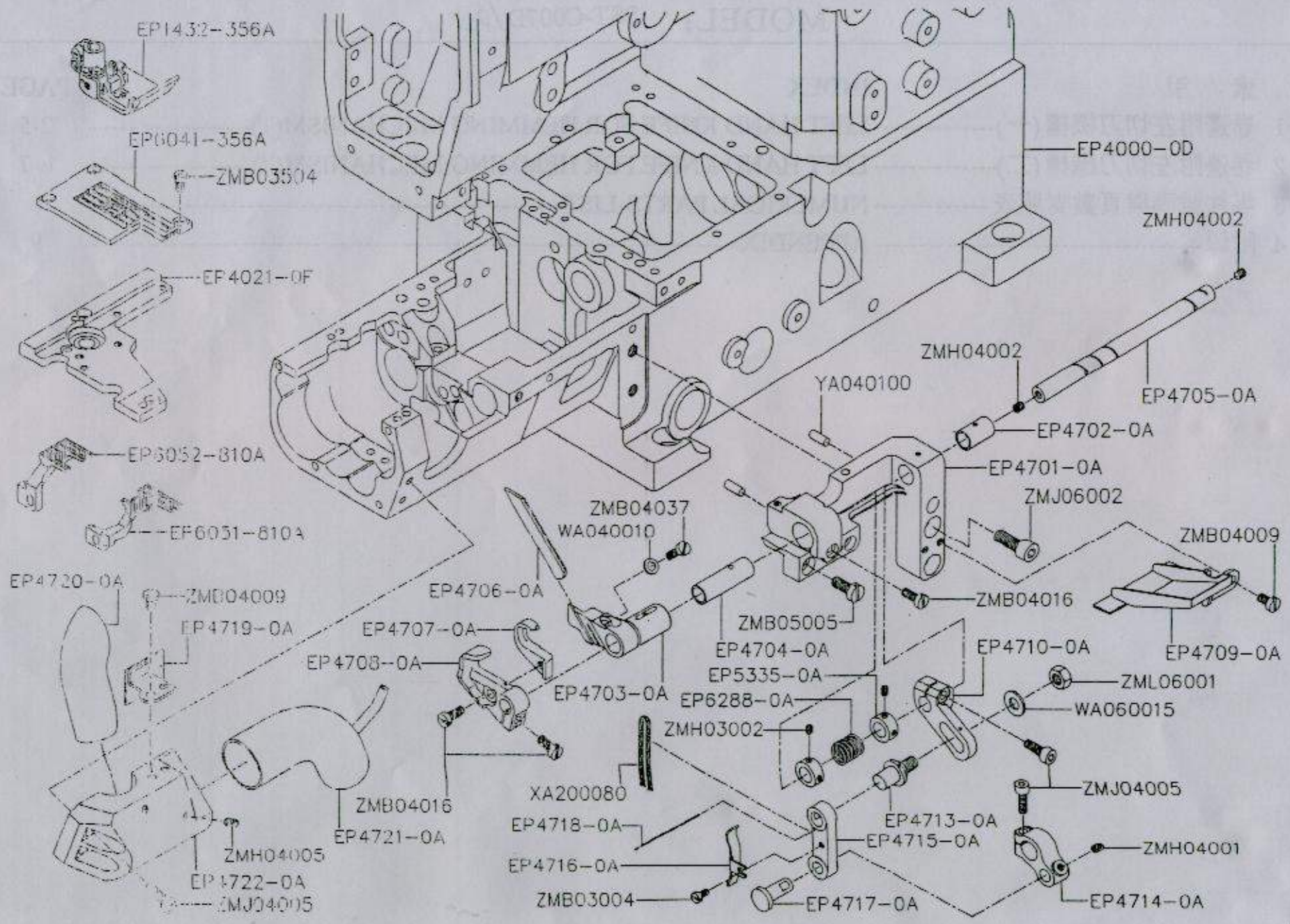

SST-C007D 捲邊附左切刀機構（一）LEFT HAND FOR HEMMING MECHAMISM（1）

零件號碼 Parts No.	零件名稱	Name of Parts	件數 Q'TY	備註 Remarks
EP1432-356A	壓脚組	Presser Foot	1	
EP4000-0D	底座	Base	1	
EP4021-0F	針板墊	Stitch Plate	1	
EP4701-0A	刀墊	Knife Plate	1	
EP4702-0A	刀軸襯套	Upper Knife Driving Shaft Bracket	1	
EP4703-0A	固定刀架	Lower Knife Holder	1	
EP4704-0A	刀架襯套	Knife Holder Driving Shaft Bracket	1	
EP4705-0A	活動切刀軸	Knife Holder Pin	1	
EP4706-0A	固定切刀	Lower Knife	1	
EP4707-0A	上切刀	Upper Knife	1	
EP4708-0A	上切刀座	Upper Knife Holder	1	
EP4709-0A	連杆護蓋	Connecting Rod Cover	1	
EP4710-0A	變距曲柄	Change Distance Brace	1	
EP4713-0A	曲柄銷	Brace Pin	1	
EP4714-0A	連杆	Connection	1	
EP4715-0A	連杆	Connection	1	
EP4716-0A	壓板	Spring	1	
EP4717-0A	連杆銷	Link	1	
EP4718-0A	配線固定紐	Wiring Fastness Button	1	
EP4719-0A	油封底	Oil Envelop Bottom	1	
EP4720-0A	導肖管	Suction Pipe	1	
EP4721-0A	導肖管	Suction Pipe	1	
EP4722-0A	吸風管座	Suction Pipe Holder Fixing Plate	1	
EP5335-0A	套管	Presser Bar Bushing	1	
EP6041-356A	針板	Stitch Plate Support	1	
EP6051-356A	送料齒（前）	Differential Feed DOG	1	
EP6052-810A	送料齒（後）	Main Feed Dog	1	
EP6288-0A	刀刃壓彈簧	Upper Knife Spring	1	
WA040010	墊圈	Washer	1	
WA060015	墊圈	Washer	1	
XA200080	油棉	Oil Wick	1	

SST-C007D TL 捲縫付左切刃機構(1) LEFT HAND KNIFE FOR HEMMING MECHANISM(1)

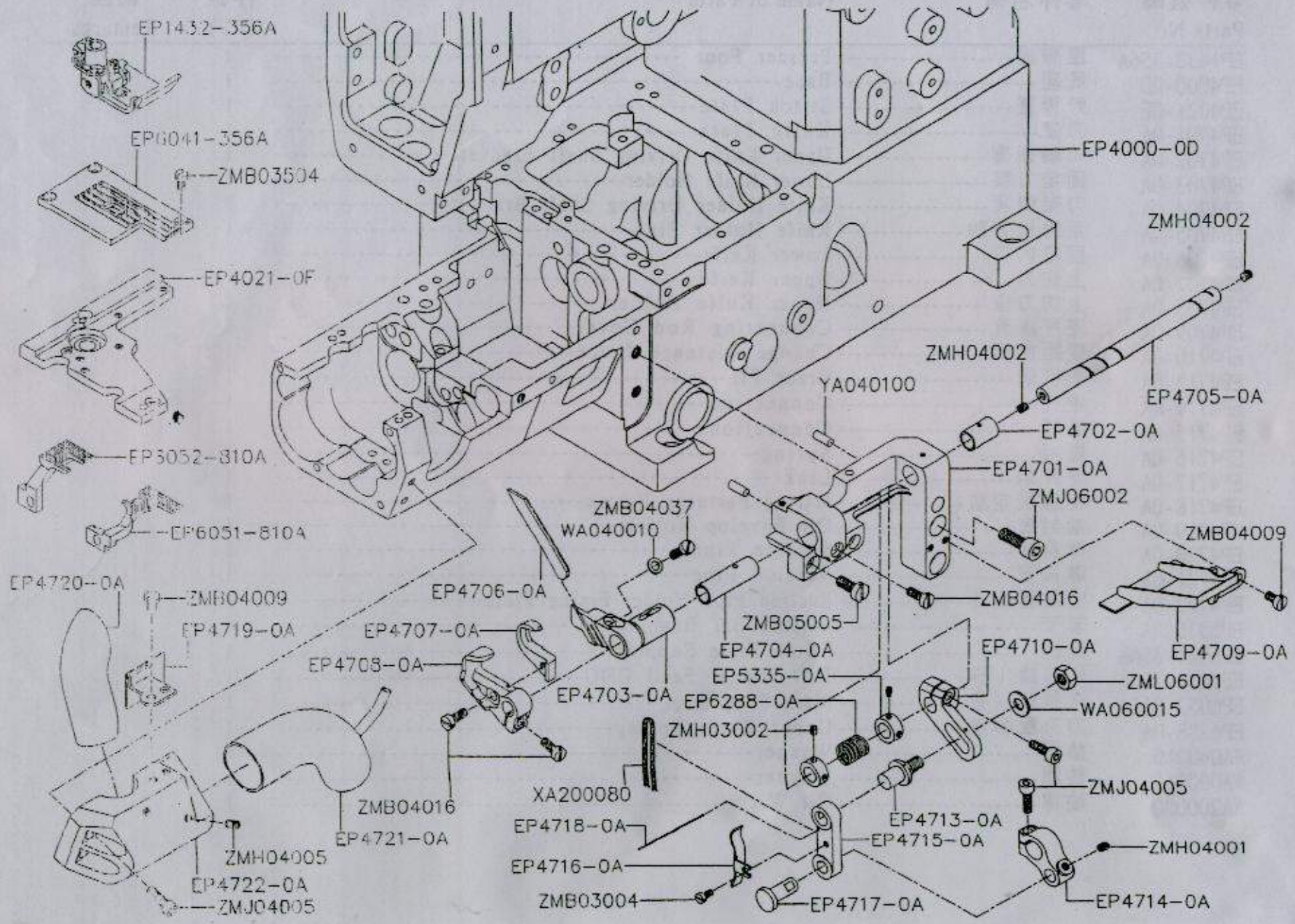

SST-C007D 捲邊附左切刀機構（一）LEFT HAND FOR HEMMING MECHAMISM(1)

零件號碼 Parts No.	零件名稱	Name of Parts	件數 Q'TY	備註 Remarks
YA040100	销	Pin	2	
ZMB03004	螺絲	Screw	1	
ZMB03504	螺絲	Screw	3	
ZMB04009	螺絲	Screw	2	
ZM004016	螺絲	Screw	3	
ZM004012	螺絲	Screw	1	
ZMB05005	螺絲	Screw	1	
ZMH03002	螺絲	Screw	4	
ZMH04001	螺丝	Screw	1	
ZMH04002	螺絲	Screw	2	
ZMH04005	螺絲	Screw	2	
ZMJ04005	螺絲	Screw	2	
ZMJ06002	螺絲	Screw	2	
ZML06001	螺帽	Nut	1	

SST-C007D 捲邊附左切刀機構(2) LEFT HAND KNIFE FOR HEMMING MECHANISM(2)

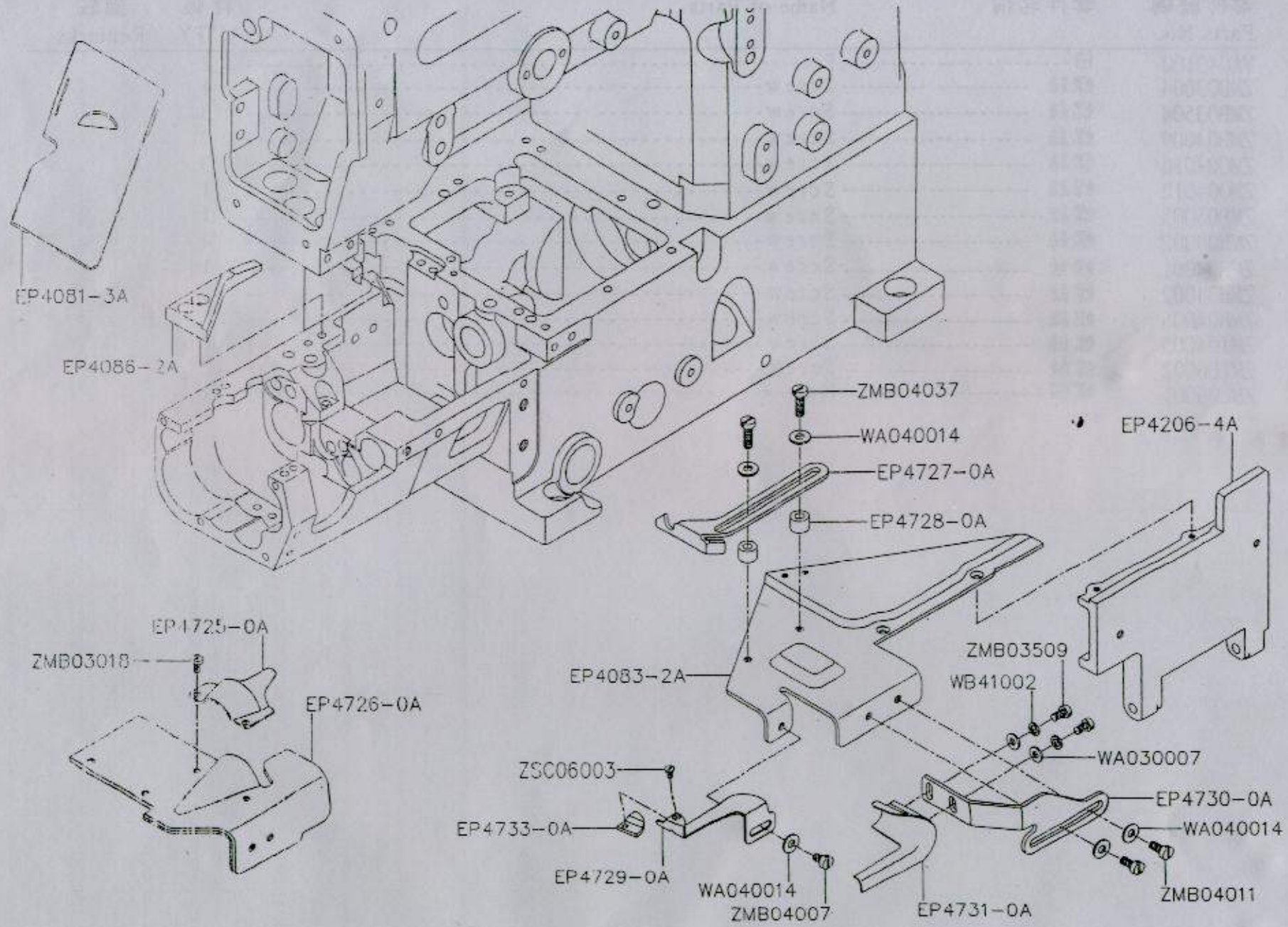

SST-C007D 捲邊附左切刀機構（二）LEFT HAND FOR HEMMING MECHAMISM(2)

零件號碼 Parts No.	零件名稱	Name of Parts	件數 Q'TY	備註 Remarks
EP4081-3A	滑動板	Slide Cover	1	
EP4083-2A	前蓋板	Front Cover	1	
EP4086-2A	輔助板	Slide Cover Supplementary Block	1	
EP4206-4A	前蓋板	Front Cover	1	
EP4725-0A	防塵蓋	Arm Side Cover	1	
EP4726-0A	防塵蓋	Arm Side Cover	1	
EP4727-0A	導模	Fabric Guide	1	
EP4728-0A	間隔環	Spacer	2	
EP4729-0A	導模	Folder	1	
EP4730-0A	導模	Folder	1	
EP4731-0A	導模	Folder	1	
EP4733-0A	導模	Folder	1	
WA030007	平墊圈	Washer	2	
WA040014	平墊圈	Washer	5	
WB41002	墊圈	Washer	2	
ZMB03018	螺絲	Screw	2	
ZMB03509	螺絲	Screw	2	
ZMQ04011	螺絲	Screw	1	
ZMQ04006	螺絲	Screw	2	
ZMQ04012	螺絲	Screw	2	
ZSC06003	螺絲	Screw	1	

SST-C007D 零件號碼與頁數對照表 Numerical Parts-List

零件號碼 PARTS NO.	頁數 PAGE	零件號碼 PARTS NO.	頁數 PAGE	零件號碼 PARTS NO.	頁數 PAGE	零件號碼 PARTS NO.	頁數 PAGE	零件號碼 PARTS NO.	頁數 PAGE
EP1432-356A	2	EP4721-0A	2	ZMB03509	6				
EP4000-0D	2	EP4722-0A	2	ZMB04009	4				
EP4021-0F	2	EP4725-0A	6	ZMB05005	4				
EP4081-3A	6	EP4726-0A	6	ZMH03002	4				
EP4083-2A	6	EP4727-0A	6	ZMH04001	4				
EP4086-2A	6	EP4728-0A	6	ZMH04002	4				
EP4206-4A	6	EP4729-0A	6	ZMH04005	4				
EP4701-0A	2	EP4730-0A	6	ZMJ04005	4				
EP4702-0A	2	EP4731-0A	6	ZMJ06002	4				
EP4703-0A	2	EP4733-0A	6	ZML06001	4				
EP4704-0A	2	EP5335-0A	2	ZMQ04006	6				
EP4705-0A	2	EP6041-356A	2	ZMQ04011	6				
EP4706-0A	2	EP6051-356A	2	ZMQ04012	4, 6				
EP4707-0A	2	EP6052-810A	2	ZMQ04016	4				
EP4708-0A	2	EP6288-0A	2	ZSC06003	6				
EP4709-0A	2	WA030007	6						
EP4710-0A	2	WA040010	2						
EP4713-0A	2	WA040014	6						
EP4714-0A	2	WA060015	2						
EP4715-0A	2	WB41002	6						
EP4716-0A	2	XA200080	2						
EP4717-0A	2	YA040100	4						
EP4718-0A	2	ZMB03004	4						
EP4719-0A	2	ZMB03018	6						
EP4720-0A	2	ZMB03504	4						

SIRUBA®
銀翰牌工業用縫紉機
INDUSTRIAL SEWING MACHINE

UTG-J UTH-J

零件圖 PARTS LIST

SSTC-007D SUN SPECIAL
ELETRÔNICA

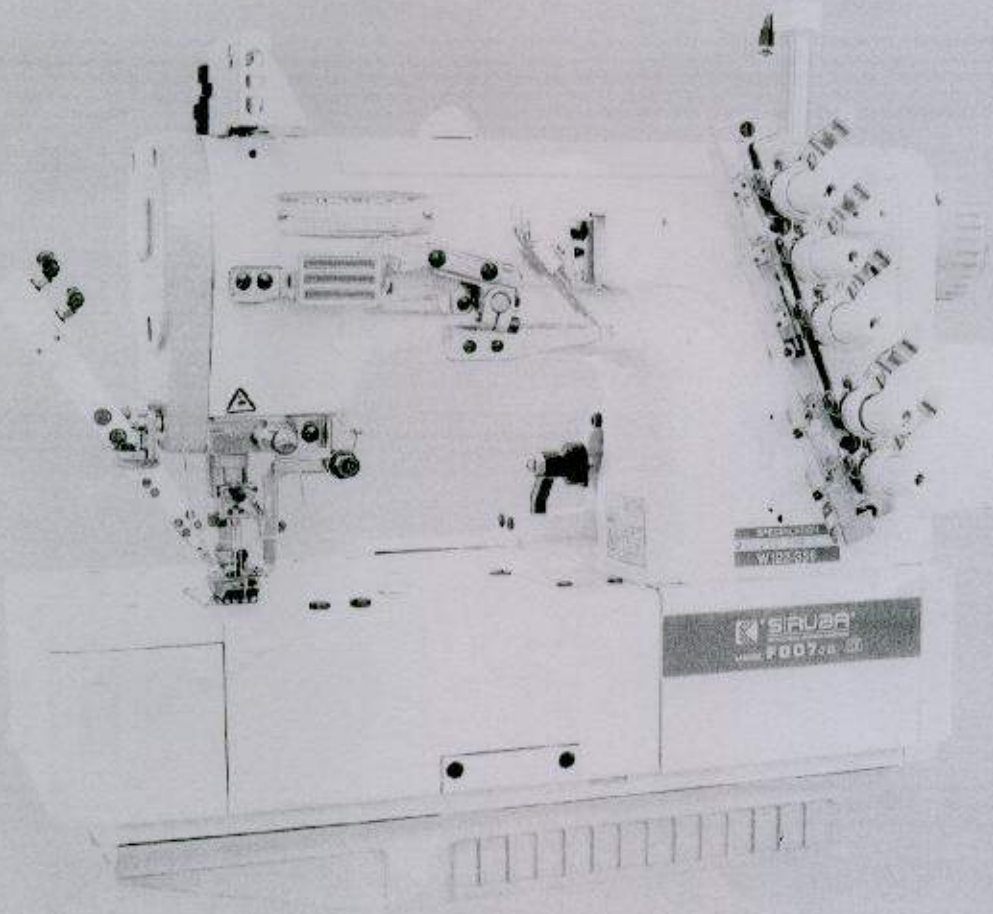

CE

高林股份有限公司
KAULIN MFG. CO., LTD.

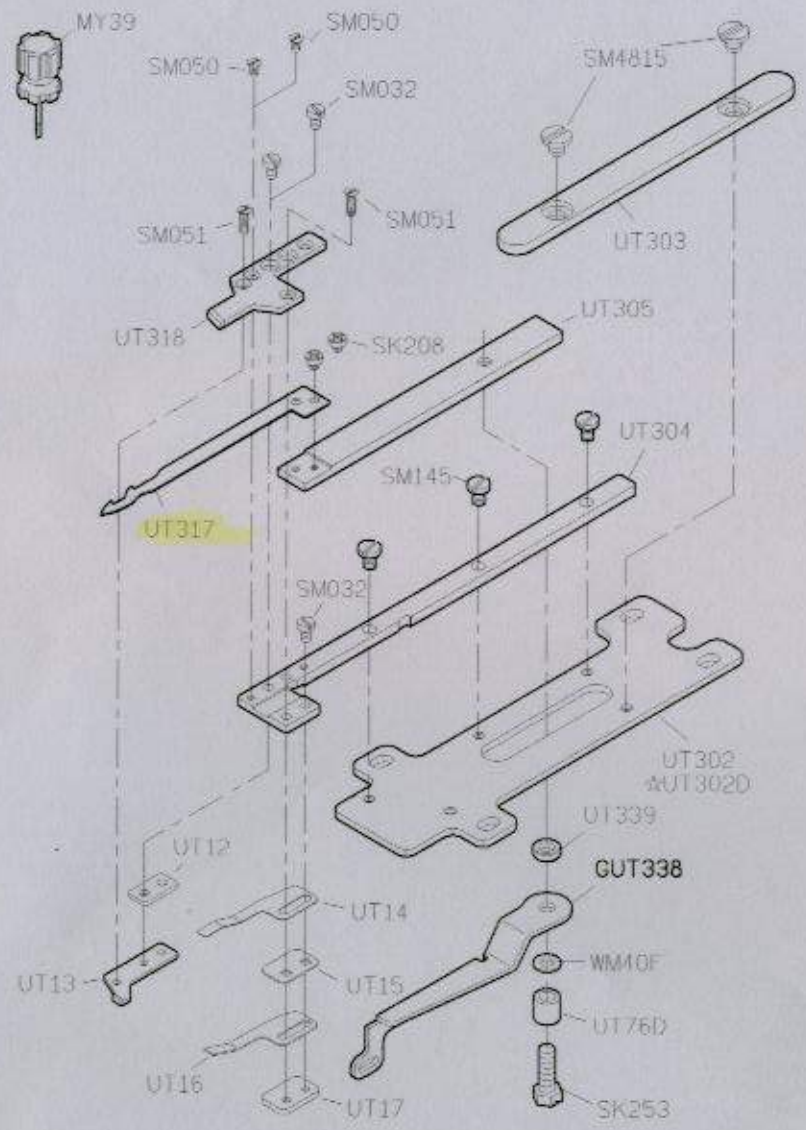

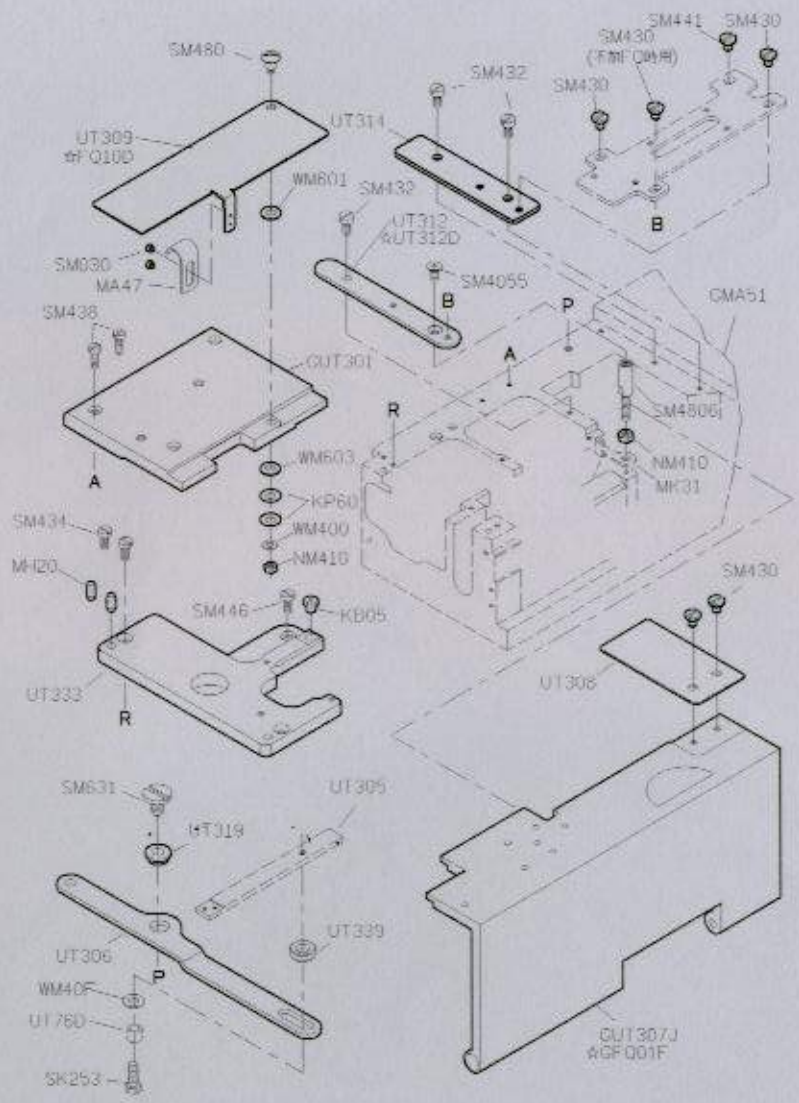

PARTS LIST FOR UTG-J (UTH-J) GROUP

PARTS LIST FOR UTG-J (UTH-J) GROUP

PARTS LIST FOR UTG-J (UTH-J) GROUP

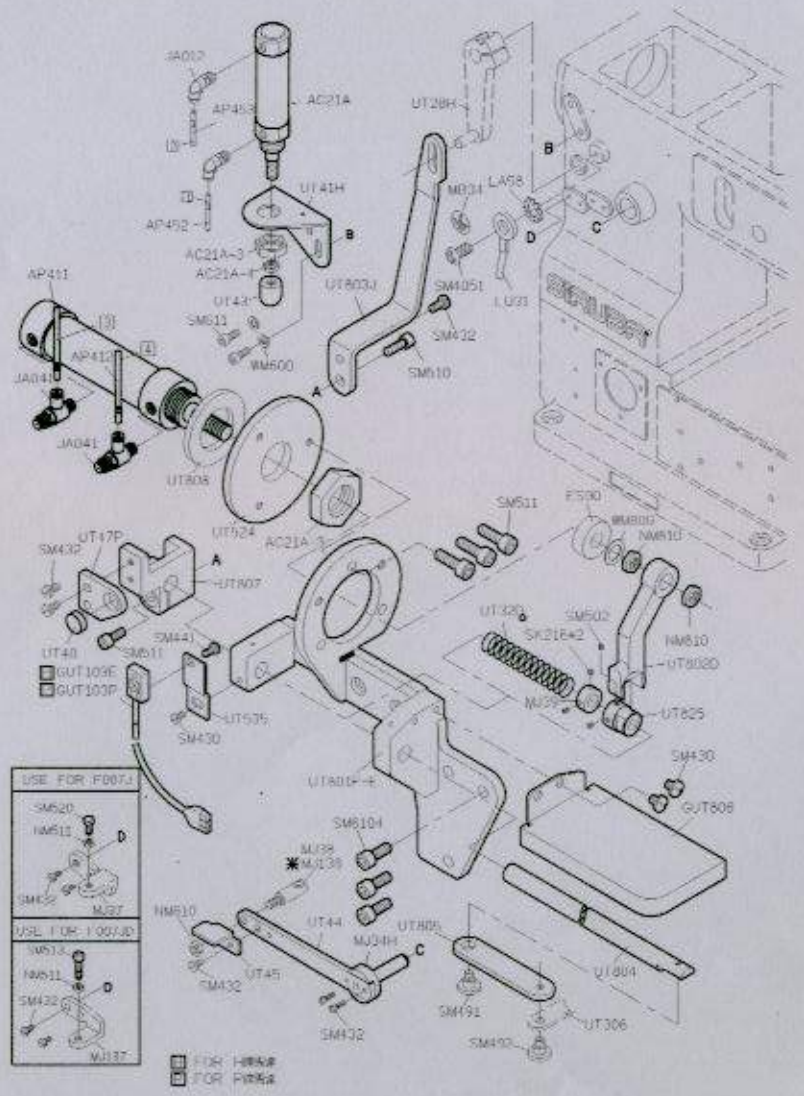

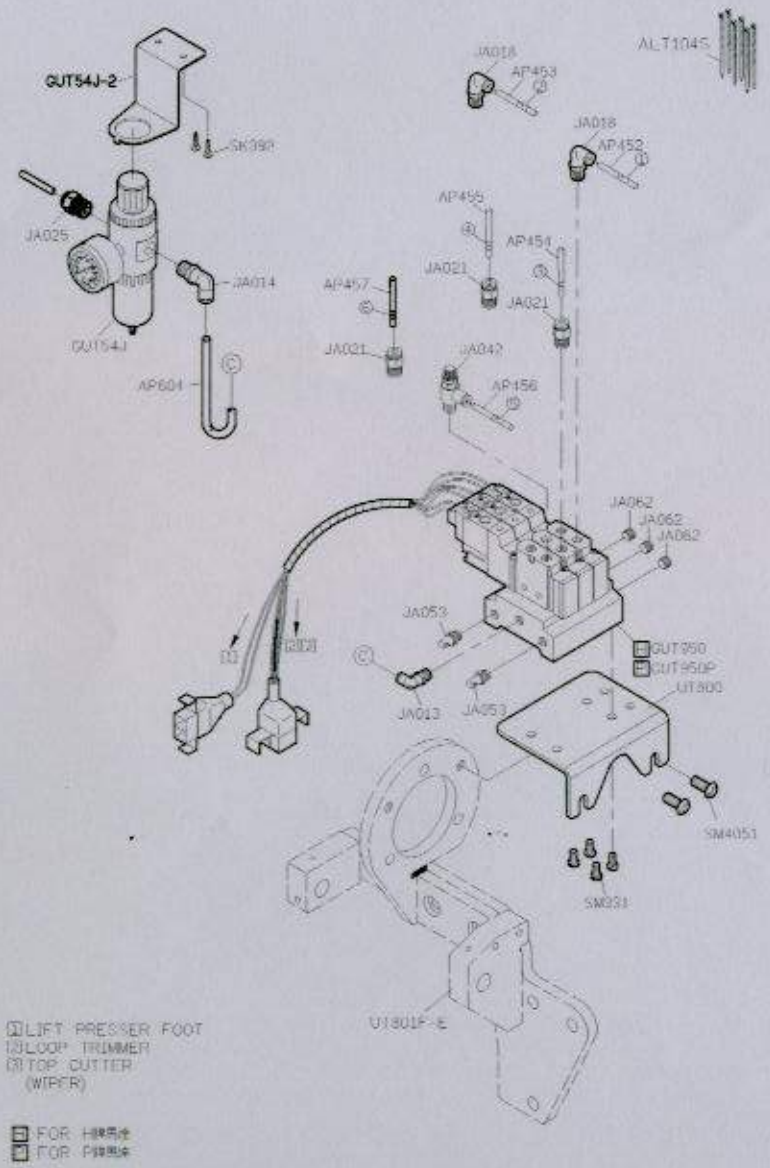

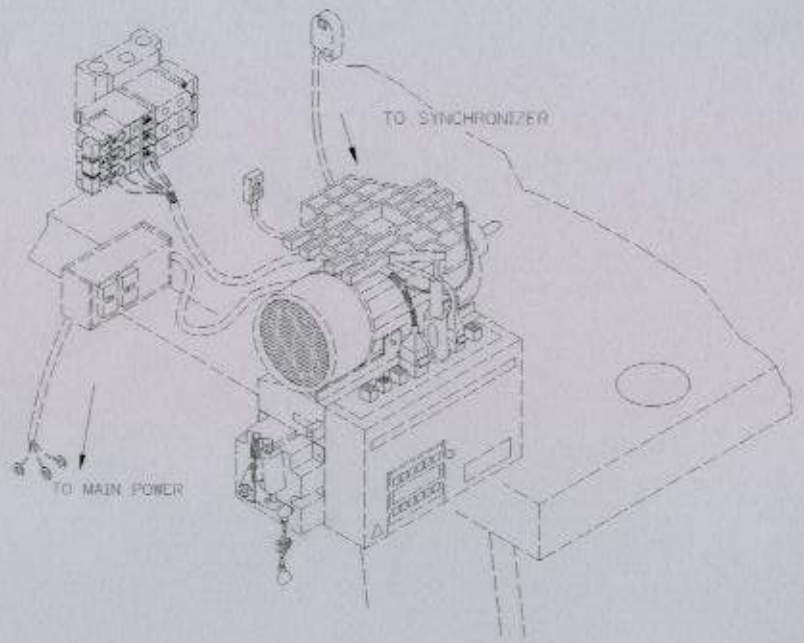

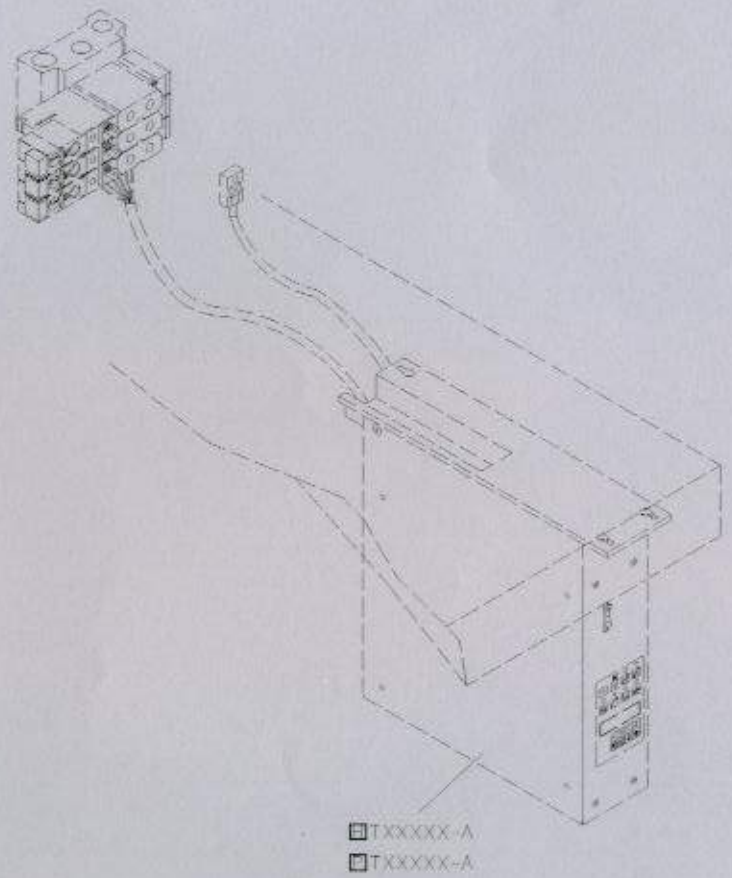

FOR [illegible] (IVP-70)
FOR [illegible]

PARTS LIST FOR UTG-J (UTH-J) GROUP

PARTS LIST FOR UTG-J (UTH-J) GROUP

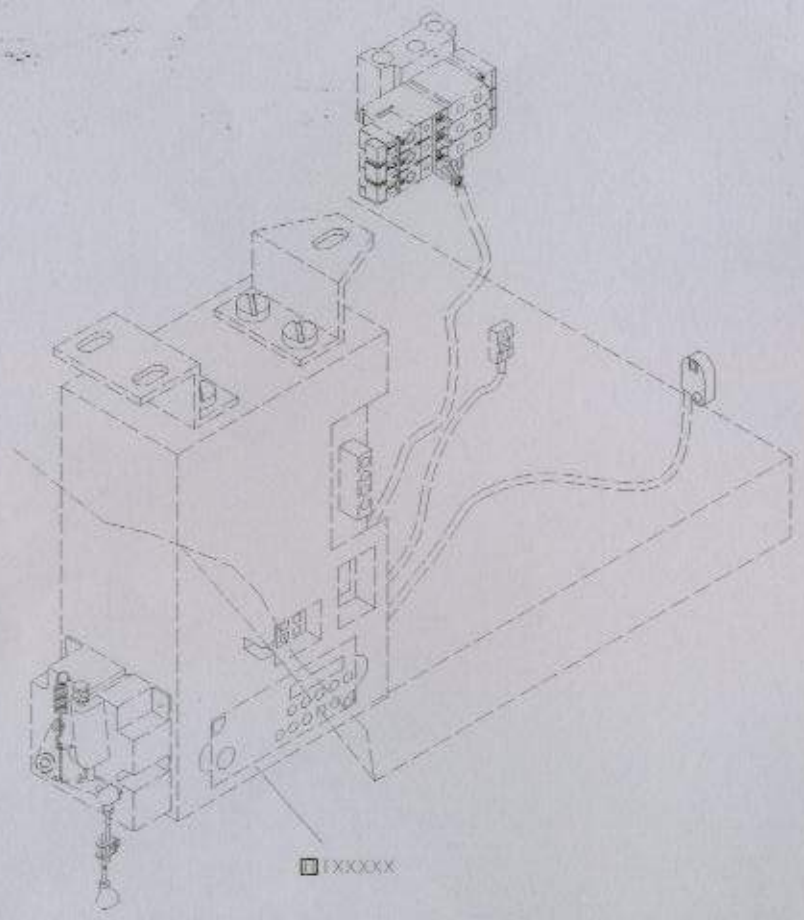

FOR HPM (HVP-20)

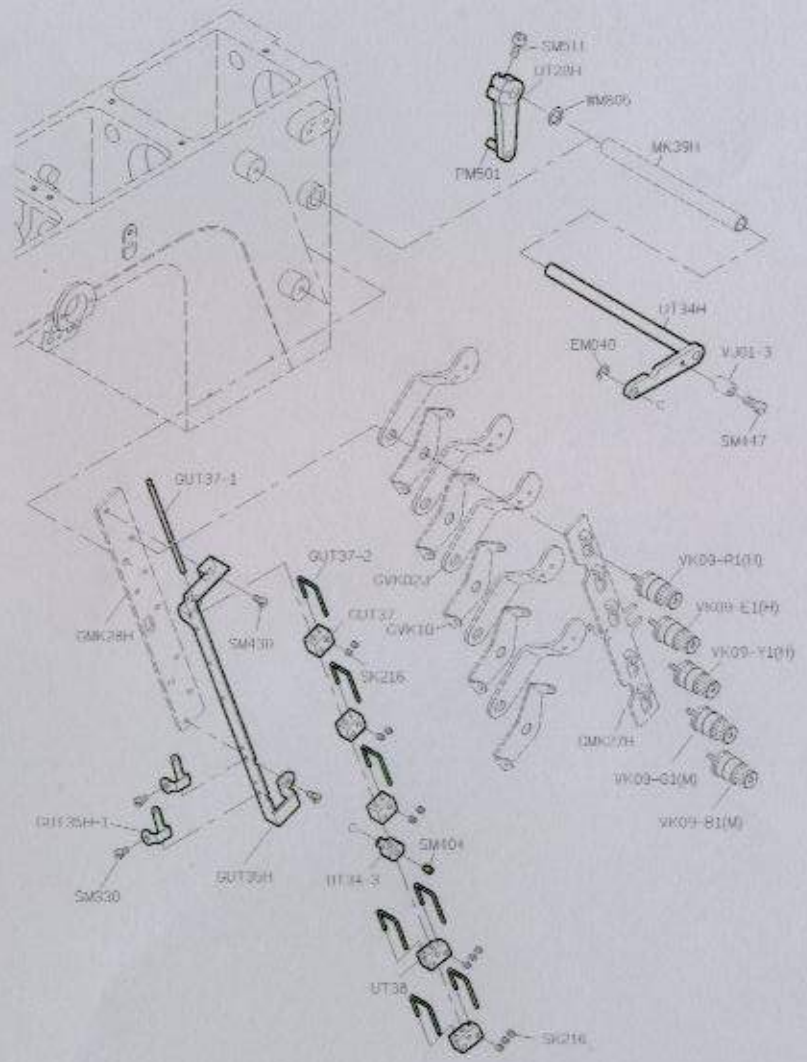

FOR LEFT SIDE

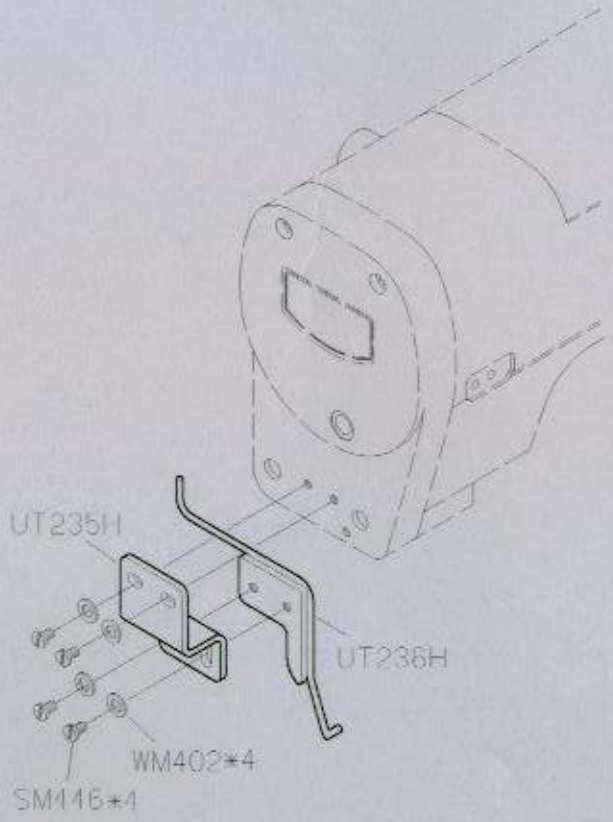

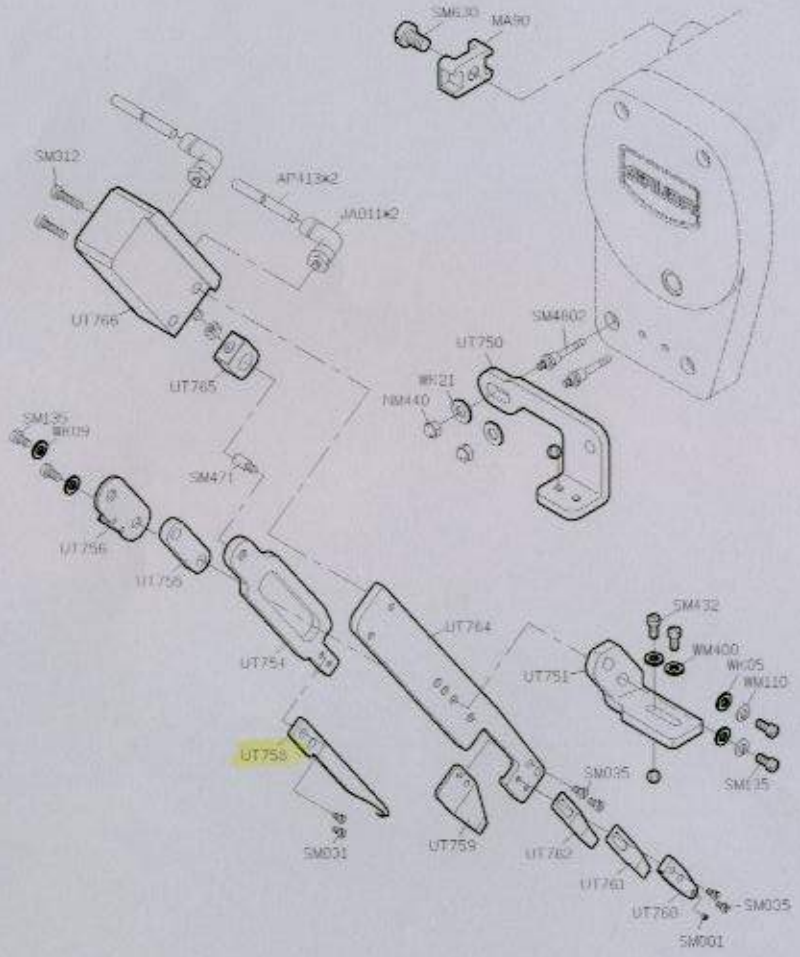

PARTS LIST FOR UTG-J (UTH-J) GROUP

PARTS LIST FOR UTG-J (UTH-J) GROUP

PARTS LIST FOR UTG-J (UTH-J) GROUP

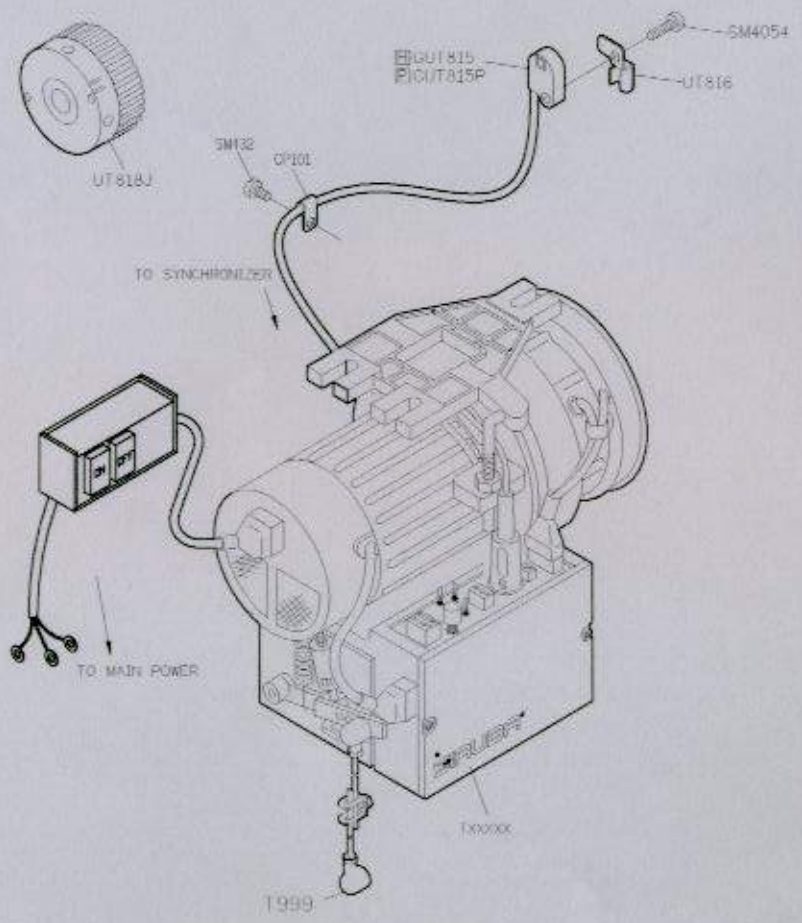

PARTS LIST FOR UTG-J (UTH-J) GROUP

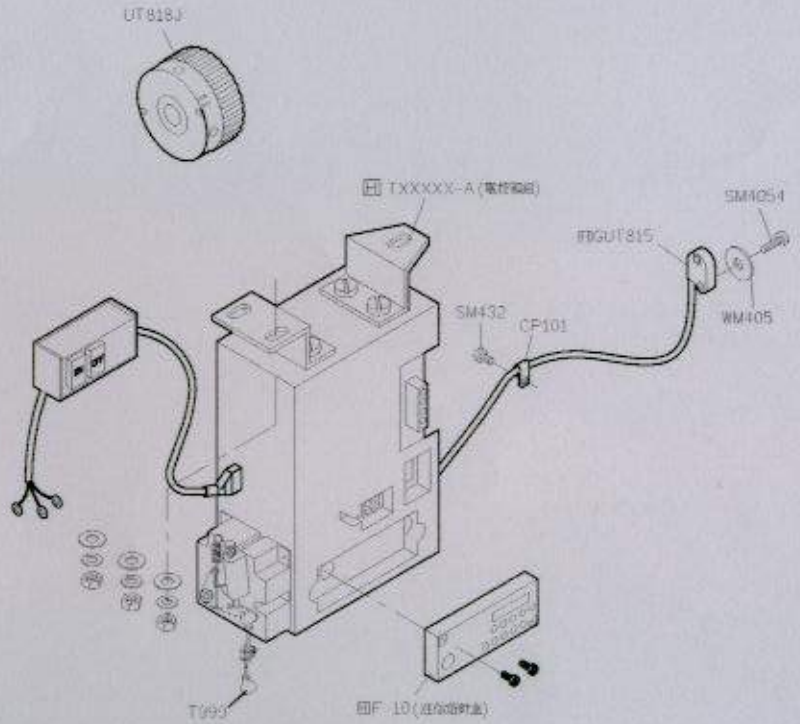

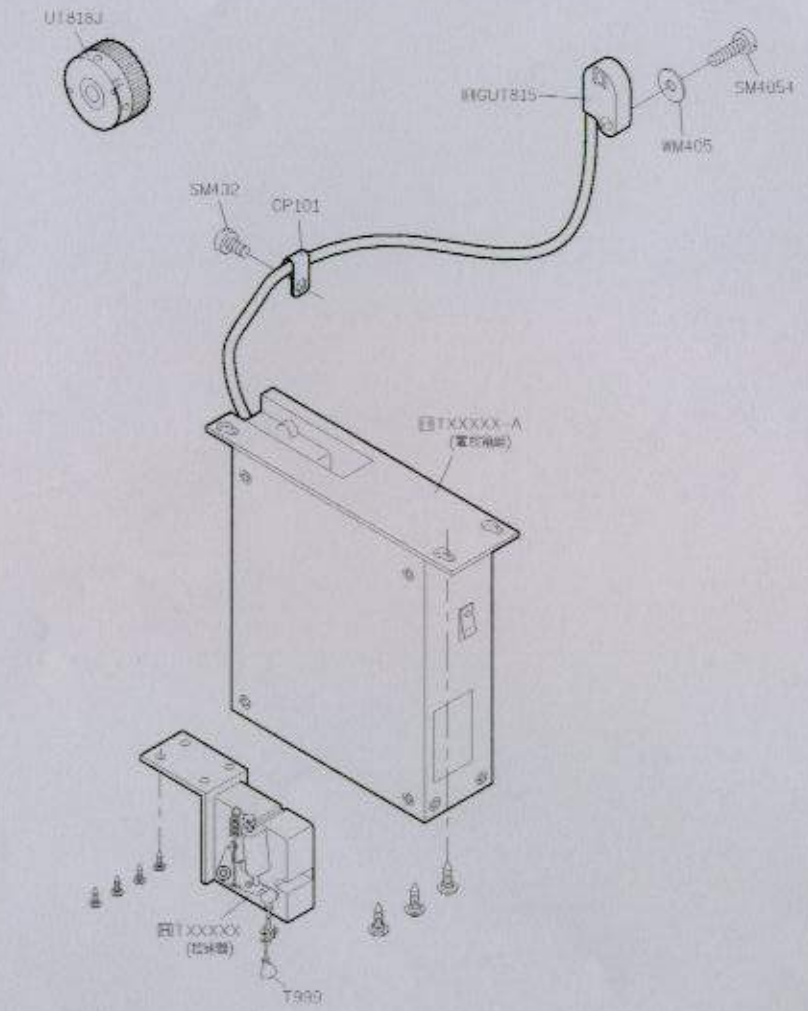

FOR H(HVP-70)

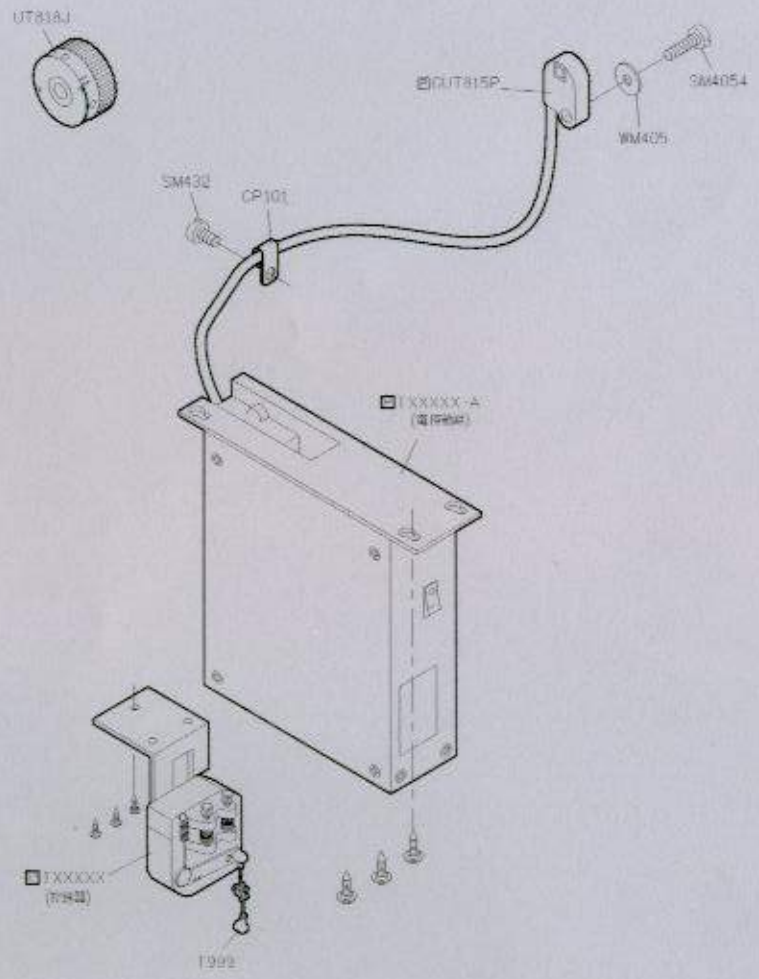

FOR P

PARTS LIST FOR UTG-J (UTH-J) GROUP

PARTS LIST FOR UTG-J (UTH-J) GROUP